BID OPENING DATE AND TIME

On: AUGUST 10, 2009 AT: 10:30 A.M.

BID NO.	PAGE	INVITATION AND BID ADVERTISED	BIDDER MUST COMPLETE BELOW
S0Z56260	1 OF 28		BIDDER AGREES TO COMPLY WITH ALL CONDITIONS OF THIS BID. UNSIGNED BIDS WILL NOT BE ACCEPTED.

This Invitation to Bid with your quotations must be received prior to the above cited bid opening date and time.

DEPARTMENT: VARIOUS

DIVISION:

AWARDED

DATE

FOR THE PROCUREMENT COMMISSIONER

CITY OF PHILADELPHIA
PROCUREMENT DEPARTMENT
MUNICIPAL SERVICES BLDG.
1401 JFK BLVD, ROOM 170A
PHILADELPHIA, PA 19102-1685

NAME AND ADDRESS OF FIRM

Federal EIN/Social Security Number

BUYER R. SAYLOR
K. OWENS

TITLE OF BID CONTEMPORARY OFFICE FURNITURE-STEEL

GENERAL INFORMATION

This Invitation to Bid is issued under the Anti-Discrimination Policy described in the Mayor's Executive Order 02-05.

While there are no Participation Ranges projected for this Bid, bidders are prohibited from discriminating in their selection of subcontractors and are encouraged to solicit quotes from businesses on an equitable basis with other firms.

For informational purposes only, please describe any such commitments on a separate sheet and identify the subcontractor's name, Commerce Department Office of Economic Opportunity (OEO) Certification Number, and dollar amount/ percentage of work.

BID QUESTIONS

All questions concerning this Invitation to Bid, including specifications and conditions, must be presented prior to the bid opening date and time. Contact the Procurement Department, Public Information Center by calling **(215) 686-4721, 686-4720, or 686-4719** with questions.

BID SECURITY

When applicable, BIDDERS MUST SUBMIT BID SECURITY.

BID SIGNATURE

BIDDERS MUST SIGN PAGE 8 OF THE "TERMS AND CONDITIONS".

For City Use Only

BID SECURITY See Conditions of Bidding	MASTER BID SECURITY		CERTIFIED CHECK SUBMITTED WITH BID	
	☐ YES	☐ NO	AMOUNT	CHECK NUMBER

VOLUNTARY PARTICIPATION AND COMMITMENT FORM (BID)
Please list any OEO Certified and SBA vendors that will participate in this bid, including the Primary Bidder.

Minority (MBE), Women (WBE), and Disabled (DSBE) Owned Business Enterprises[1]

Bid Number		**Name of Bidder**			
Primary Bidder	**MBE ❑**	**WBE ❑**	**DSBE ❑**	**N/A ❑**	**SBA ❑**
Federal Tax Identification #					
Amount Committed		**Type of Work or Materials**			
Dollar Amount	**$**				
Percent of Total Bid	**%**				
Sub Contractor	**MBE ❑**	**WBE ❑**	**DSBE ❑**		
Vendor Name					
Federal Tax Identification #					
Amount Committed		**Type of Work or Materials**			
Dollar Amount	**$**				
Percent of Total Bid	**%**				
Sub Contractor	**MBE ❑**	**WBE ❑**	**DS-DBE ❑**		
Vendor Name					
Federal Tax Identification #					
Amount Committed		**Type of Work or Materials**			
Dollar Amount	**$**				
Percent of Total Bid	**%**				
Sub Contractor	**MBE ❑**	**WBE ❑**	**DSBE ❑**		
Vendor Name					
Federal Tax Identification #					
Amount Committed		**Type of Work or Materials**			
Dollar Amount	**$**				
Percent of Total Bid	**%**				

REVISED 2-2009 OEO

1 MBE/WBE/DSBES listed above **MUST** be certified by the OEO prior to Bid Opening Date.

SECTION 1: GENERAL BID SUBMISSION

1.1 **TITLE: CONTEMPORARY OFFICE FURNITURE, STEEL**

1.2 **SCHEDULE NO: 66-01**

1.3 **CONTRACT TERM**: **12/01/2009 to 11/30/2010** ("Initial Term"), with an option to renew for up to **THREE (3)** additional **ONE (1)** year periods, ("the Renewal Term") exercisable, at the City's sole discretion, as of the expiration of the Initial Term or then current Renewal term. The City may, at its sole discretion, renew the contract for up to three (3) months at the beginning of each renewal period(s) (the "Additional Performance Period"), if a decision has been made not to renew the contract for an entire year.

1.3.1 The City shall exercise such sole option to renew the Contract Term by issuing a letter (the "Renewal Notice") notifying the Contractor that the Contract is renewed for the Renewal Term or Additional Performance Period (identified by commencement and termination dates) that is specified in the Renewal Notice. The Contract shall be deemed to be renewed for such Renewal Term or Additional Performance Period, and Contractor shall be obligated to perform all terms and conditions of the Contract throughout such Renewal Term or Additional Performance Period, as of the effective date indicated on the City's Renewal Notice, whether or not Contractor has agreed, verbally or in writing, to such renewal of the Contract term.

1.3.2 If an individual Performance Bond and/or Payment Bond is required under this Invitation and Bid, such bond(s) shall be and remain in full force and effect throughout the Initial Term, all Renewal Terms, any Additional Performance Period, and the period of any unexpired warranty provided or required under the Contract, without notice of Contract renewal by the City to the surety or the consent of the surety thereto. It is the sole responsibility of the Contractor to ensure that such bond(s) remain in full force and effect as provided in this Section, and failure to do so shall be an event of default pursuant to Section 19, Default, of the attached Terms and Conditions of Bidding and Contract.

If participation in the City's Master Performance Security Program is required under this Invitation and Bid, Contractor shall pay the required annual fee for such participation for each Renewal Term upon the issuance of the Renewal Notice.

1.4 **CONTRACT TYPE: REQUIREMENTS**

1.4.1 The following items are required in the operation of various City agencies as ordered. Exact quantities cannot now be determined but estimates thereof are listed herein. Quantities listed may be increased or decreased to meet the requirements of the City during the period of this contract. A minimum is not guaranteed. Purchase orders issued as a result of this bid will be for materials or services to be delivered generally on an as-needed basis. Successful bidders are cautioned not to deliver any materials or services without first being advised to do so by the ordering agency.

1.4.2 It is the intent of the Procurement Department to make an award for the period as stated above subject to the appropriation of funds in succeeding fiscal year/years by City Council. The City's fiscal year is from July 1st to June 30th inclusive.

Commodities or services on the bid to be ordered after the end of the fiscal year are subject to the issuance of purchase orders for the following fiscal years. The City is not liable for the award involving following fiscal years' funds until such orders are issued.

The successful bidder(s) obligation to deliver on such purchase orders shall not take effect until the orders are issued. To simplify the contract procedure, however, the successful vendor will be required to furnish a Performance Bond or Performance Security Fee to cover units awarded to him.

1.5 **METHODOLOGY OF ACQUISITION**: **PURCHASE** only.

1.6 **STATEMENT OF DIRECTION:**
It is the intent of the City of Philadelphia to make an award for **CONTEMPORARY OFFICE FURNITURE, STEEL** for the various City agencies and departments as specified herein during the contract period.

1.7 **BID SECURITY**

1.7.1 Bid security shall be based upon **the Estimated Contract per Section 1.8.3.**

All bids submitted with a total greater than $30.000.00 must be accompanied by the proper Bid Security.

Bidders already enrolled in the City's Master Bid Security Program for July 1, 2009 to June 30, 2010 are not required to provide Bid Security if their bid total is $500,000.00 or less (per paragraph 2 of "Terms and Conditions of Bidding and Contract").

1.7.2 **The Master Security Program** allows bidders to qualify for bid security for individual bids submitted during the covered bidding period provided the individual bid total is $500,000.00 or less.

1.7.3 **Bids Opening July 1, 2009 through June 30, 2010**
Bidders may qualify for the Master Bid Security Program described above for **July 1, 2009 – June 30, 2010** by submitting a check in the amount of **$120.00** made payable to the City of Philadelphia. The check should be submitted, under separate cover, to the Bid Unit Supervisor at least one day prior to the first bid that the bidder wants covered under the program and is *non-refundable.* Or if, and only if, the bidder chooses to submit the check for the Master Bid Security Program with their bid, the check **MUST** be in the form of a Certified, Treasurer's or Cashier's Check, Bank or United States Postal Money Order and is non-refundable.

If the bidder is not enrolled and does not intend to enroll; or if the total value of the bid submitted exceeds $500,000.00, the Master Bid Security Program is not applicable. Bidders instead MUST submit with their bid a refundable Certified, Treasurer's or Cashier's Check, Bank Money Order or United States Postal Money Order in the amount of **$2,000.00.**

1.8 **BID INFORMATION**:

1.8.1 All information concerning this bid will be contained in this bid document as issued or amended.

1.8.2 Information provided verbally by any City official shall not be binding or relevant.

1.8.3 **Estimated Expenditures for Contract Period.....$130,000.00**

1.9 **BID SUBMISSION**:

1.9.1 Bid information must be submitted to the City of Philadelphia no later than the time and date for the bid opening.

1.9.2 Advertised sealed bids will be received and read publicly at 10:30 AM in Room #170A, 1st Floor, Municipal Services Building, 1401 JFK Boulevard.

1.9.3 Bid should be complete and include ALL information required as described in the various paragraphs of the bid specifications.

1.9.4 All pricing must be completed on the forms provided; be complete; and be in ink or typed.

1.9.5 The bid must be complete as to required bid signatures and corporate seal, and fully accept the terms and conditions contained in the bid.

1.9.6 **BID PROCESSING FEE:**
For purposes of this bid ONLY, bidder must submit with their bid a non-refundable check or money order payable to the City of Philadelphia in the amount of **$30.00** to cover the bid processing fee. Failure to submit the bid processing fee may result in disqualification from bidding.

1.9.7 When M-BE, W-BE or DS-BE ranges are required on an Invitation and Bid, bidders are reminded that the submission of a blank "Commerce Department Office of Economic Opportunity (OEO) Solicitation and Commitment Form" will be deemed
non-responsive and ineligible for an award. Bidders are reminded to read carefully and entirely the "Bidder's Guidelines relating to Executive Order 02-05".

OR

If no M-BE, W-BE or DS-BE ranges are established for this Invitation and Bid, bidders are requested to complete the "Voluntary Participation and Commitment Form (Bid)" located after page 1 of the bid.

Completion of this form will not, in any way, impact the City's determination concerning bidder's responsiveness to the requirements of the bid and the award process. The information provided in the "Voluntary Participation and Commitment Form (Bid)" will be for the City's information.

1.9.8 In accordance with the City of Philadelphia's Regulations Relating to Local Bidding Preferences for Procurement Contracts, this bid may be subject to a 5% local bid preference. In order to determine eligibility to receive the 5% preference, if applicable, bidder or subcontractor **must be certified at the time of the bid opening and must submit with the bid, the Local Business Entity Certification number** as issued by the Procurement Department for the prime contractor or the applicable subcontractor. If the prime relies upon its subcontractor's LBE status in order to be eligible for the preference, the name and certification number of the subcontractor **must** be submitted with the bid. **Failure to submit the prime's LBE certification number or the subcontractor's name and LBE certification number with the bid will deem bidder ineligible for the 5% preference.**

Further, by submission of this bid, bidder makes the following certification in connection with the grant of any local bidding preference:

"I certify, that if awarded this contract on the basis of application of the LBE preference, my company or my subcontractor, throughout the entirety of this contract, will perform the majority of the work under this contract within the geographic limits of the City of Philadelphia, and I will, or cause my subcontractor to, maintain within the City a majority of the inventory or equipment that will be used on this contract or the amount of inventory that is customary for this industry."

Prime or subcontractor's LBE Certification Number_____

If applicable:
Subcontractor's Name_____

***NOTE: If you wish to apply for Local Business Entity (LBE) certification, go to www.phila.gov/bids. Please provide sufficient time prior to bidding for processing of the LBE application.**

1.9.9 **BID QUESTIONS OR PROBLEMS**

In preparing the bid response, should any bidder need clarification on the bid requirements, identify a discrepancy in the specifications, determine that a specified product has been discontinued or an alternate procedure is advised, etc.; then the bidder is STRONGLY encouraged to bring these issues to the attention of the Procurement Department's Public Information Unit prior to the bid opening by calling (215) 686-4720 or 4721, or by faxing (215) 686-4716. **Questions, whether phoned or faxed, should be received no later than seven (7) calendar days prior to the scheduled opening date of the bid. The City reserves the right to only respond to those questions submitted prior to the stated deadline.** If it is in the City's best interest to do so, the bid MAY be amended to reflect the proposed changes/modifications. **Exceptions taken DO NOT obligate the City to change the specifications. The City of Philadelphia, Procurement Department will notify all bidders in writing, by addendum duly issued, of any interpretations/changes made to specifications or instructions. The City will not accept responsibility for oral instructions, suggestions or changes by any City agency.**

Otherwise the successful bidder will have to provide the product or service exactly as defined in this bid, and in accordance with the specifications and requirements as listed in this Invitation and Bid.

1.9.10 **CONTACT PERSON(S):**

PRE-AWARD:
Indicate below to whom in your firm questions concerning this Invitation and Bid should be directed:

Name:_____

Address:_____

City/State/ZC:_____

Telephone No.(_____)_____ Ext.:_____

Fax No.(_____)_____

E-mail address_____

State Company Web Site Address:_____

POST-AWARD:
Indicate below to whom in your firm questions concerning the Contract resulting from this Invitation and Bid should be directed:

Name:_____

Address:_____

City/State/ZC:_____

Telephone No.(_____)_____ Ext.:_____

Fax No.(_____)_____

E-mail address_____

1.10 **BIDDER QUALIFICATION:**

1.10.1 All bidders must be a bona fide manufacturer of, or dealer in, the article or service specified within the bid. To demonstrate this, bidders should submit the following reference information with their bid. References provided should be pertinent to the commodity or service requested in this Invitation and Bid; and demonstrate the bidder's ability to perform on a contract of this size and scope.

Please note that reference information in each section must be completed. Failure to submit this information may result in the bidder's disqualification.

SECTION 1:

Customer References other than an employee or department of the City of Philadelphia, (excluding suppliers or financial institutions).

	A.	B.	C
Firm Name:	_____	_____	_____
Address:	_____	_____	_____
Contact:	_____	_____	_____
Phone #:	_____	_____	_____
Type Work:	_____	_____	_____
Years dealing w/your firm:	_____	_____	_____

SECTION 2:

Previous purchase order(s)/contract(s) with the City; (State "None" if applicable)

P.O./Contract Number:	_____	_____	_____
Department:	_____	_____	_____
Contact Name:	_____	_____	_____
Phone #:	_____	_____	_____
Item(s):	_____	_____	_____

NOTE: Do not provide the name and phone number of a Procurement Department Buyer in this section. Contact name(s) and phone number(s) must be from a City ordering department.

SECTION 2: ITEM REQUIREMENTS AND SPECIFICATIONS

2.1 The successful bidder shall be required to provide the City of Philadelphia with **CONTEMPORARTY OFFICE FUNITURE, STEEL** as specified in Sections 2 and 5 of this Invitation and Bid.

2.2 **CITY AND VENDOR DELIVERY RESPONSIBILITIES**

2.2.1 This bid and resultant contract do not provide for the awarded vendor to out move existing furniture. **Out moves of existing furniture remains the responsibility of the ordering City agency.** The ordering City agency must have the site prepared for delivery of new furniture in all respects.

2.2.2 The vendor will not be required to move computers, copiers, electrical items, electrical lines or connections of any sort.

2.2.3 The vendor will be fully responsible for item assembly and setup, as required, for all items delivered under the contract. Delivered items will be prepared and serviced to the degree that they are fully installed and ready for use in the office setting. Additionally, the vendor will be responsible for removing all debris associated with delivered items.

Delivery, assembly, setup and removal of debris must be incorporated into the bidder's Net Price to the City (listed in Section5, "Pricing").

2.3 **COPIES OF BID SPECIFICATIONS**

2.3.1 This bid makes reference to **Procurement Department Specification 17-0-1F:97, Office Furniture, Steel, Contemporary Style** attached.

2.3.2 Bidders are requested to retain Procurement Department Specifications for future reference.

2.4 **ITEM SPECIFICATIONS:**

43010 001
Contractor is to provide the following types of items.

2.4.1 Type 1, double pedestal desk, nominal 60" x 30", with center drawer

2.4.2 Type 2, overhang desk, 72" x 36", with center drawer - for executive personnel

2.4.3 Type 3, Single pedestal desk, nominal 45" x 30", left or right pedestal, with center drawer

2.4.4 Type 5, "L" assembly, consisting of two L units; 60" x 30" and 42" x 18" level top surface, drawer pedestal in each, includes center drawer.

2.4.5 Type 5A, same as type 5 except sizes: 66" x 30" and 42" x 24".

2.4.6 Type 6, "L" assembly, consisting of two L units, 60" x 30" with drawer pedestal and 42" x 18" the latter being depressed and with one (1) personal drawer and two (2) box drawers with stationery storage compartment. Includes a center drawer.

2.4.7 Type 6A, same as Type 6 except sizes are: 66" x 30" and 42" x 24"

2.4.8 Type 7, "L" assembly, consisting of two L units, a 60" x 30" with drawer pedestal, and a 42" x 18" panel end top without the storage pedestal, includes a center drawer.

2.4.9 Type 7A, same as Type 7 except sizes 66" x 30" and 42" x 24".

2.4.10 Type 8, Credenza, various, design to harmonize with desk, for Category "E" only.

2.4.11 Type 9, Credenzas, various, design to harmonize with desk, for Category "E" only.

2.4.12 Type 10, Credenzas, various, design to harmonize with desk; for Category "E" only.

2.4.13 Type 11, Flat top table, no drawers, 60" x 30", four legs, open.

2.4.14 Type 12, overhang conference table, 72" x 36", four legs, open.

2.4.15 Type 13, Bookcase, four shelf (3 adjustable); 36" width, nominal height 54"; without sliding glass doors.

2.4.16 Type 13, Bookcase, four shelf (3 adjustable); 36" width, nominal height 52"; with sliding glass doors.

2.5 **GENERAL INSTRUCTIONS FOR PRICING:**

2.5.1 Bidder shall submit prices for all items in Section 5, "Pricing," of this bid.

2.5.2 Bidder shall submit a price list for all items listed in the bid. Failure to conform to these requirements will disqualify your bid.

2.5.3 Bidder to specify the manufacturer and model number offered for each item listed in this bid.

2.5.4 Bidder is to bid one manufacturer.

2.5.5 The price and any other production information list to be submitted by the bidder is for verification of product, price, and specification only. Bidder agrees that any additional terms or conditions contained therein, including, but not limited to, disclaimers or limitations of liability, do not become part of the bid.

2.5.6 The computed percentage discount will apply to all items on the price list, to include those items listed in this Invitation and Bid, submitted by the bidder with the bid.

Delivery, assembly, setup and removal of debris must be incorporated into the bidder's Net Price to the City (listed in Section5, "Pricing").

2.6 **WARRANTY:**

During the term of the contract, all items furnished shall be newly manufactured and the latest current model in production. Each system and all of its components are to be guaranteed against failure from use for a period of five years from date of acceptance. This does not include incidental or mischievous damage nor does it include normal wear and tear.

2.7 **PRODUCT TESTING:**
The City reserves the right to conduct product testing of product submitted by bidders using the American National Standards Institute/ Business and Institutional Furniture Manufacturer's Association (ASTM/BIFMA) test method X5.5 – 1989.

2.8 **DELIVERY LOCATION**:
Vendor will be notified of various delivery locations by City of Philadelphia agencies.

Vendor to complete Section 5, "Type of Transport."

SECTION 3: BID EVALUATION AND AWARD

3.1 **EVALUATION:**

3.1.1 Bids will be evaluated by the Procurement Department.

3.1.2 Bids will be evaluated for responsiveness to the bid specifications and for responsibility of the bidders.

3.1.3 Bids which are determined to be non-responsive for reasons of:

(i) improper bid security
(ii) improper bid execution
(iii) incompleteness
(iv) offering counter terms and conditions
(v) improper or incomplete execution of OEO documents (if applicable)

may be disqualified by the City without notice to the bidder. The decision of the City is final.

3.1.4 Bidders whose bids are determined to be non-responsible for reasons of bidder qualification shall be notified by the City of the reasons for the determination and may contest the finding of non-responsibility through the prescribed procedures described in paragraph 9 of "Terms and Conditions of Bidding and Contract".

3.2 **AWARD:**

3.2.1 **BASIS OF AWARD**:
This Invitation and Bid shall be awarded as a whole to the responsive and responsible bidder offering the lowest overall total net price to the City.

3.2.2 A sample item, for one, several or all items, may be required prior to award. Shipment costs to and from the City department shall be the responsibility of the bidder.

3.2.3 If the 5 % local bid preference is applicable, the total bid price or total section price of the certified Local Business Entity (LBE) will be multiplied by .95 and rounded to the second decimal place. The adjusted bid price of the LBE will then be used in determining the lowest responsive and responsible bidder. If any section of the bid is awarded by line item, the 5% local bid preference will not apply to that section.

Unless the Procurement Commissioner determines not to grant a preference for the reasons stated in subsection b., of the LBE Regulation, an LBE, whose bid is otherwise responsive and responsible and who has submitted the information required above, shall be granted a five percent bid preference on competitive bid(s) awards that are over $30.000.00 and awarded as a whole or by section.

3.2.4 **PERFORMANCE SECURITY:**
Bidder's attention is directed to paragraph 14 of "Terms and Conditions of Bidding and Contract," for the required Performance Security.

Please note however, that all awards as a result of this bid will have a minimum contract amount of $30,000.01. All awards at the $30,000.01 amount will be subject to a $50.00 Master Performance Security Fee.

Performance security shall be required for any subsequent renewal periods.

3.2.5 **City of Philadelphia-Business, Corporate and Slavery Era Insurance Disclosure**

In accordance with Section 17-104 of The Philadelphia Code, the Bidder, after execution of this Contract, will complete an affidavit certifying and representing that the Bidder (including any parent company, subsidiary, exclusive distributor or company affiliated with Bidder) has searched any and all records of the Bidder or any predecessor business entity regarding records of investments or profits from slavery or slaveholder insurance policies during the slavery era. The names of any slaves or slaveholders described in those records must be disclosed in the affidavit.

The Bidder expressly understands and agrees that any false certification or representation in connection with this Paragraph and/or any failure to comply with the provisions of this Paragraph shall constitute a substantial breach of this Contract entitling the City to all rights and remedies provided in this Contract or otherwise available in law (including, but not limited to, Section 17-104 of the Philadelphia Code) or equity and the contract will be deemed voidable. In addition, it is understood that false certification or representation is subject to prosecution under Title 18 Pa.C.S.A. Section 4904.

3.2.6 **INSURANCE:**

Insurance is a requirement for this bid in accordance with Paragraph 15 of the "Terms and Conditions of Bidding and Contract". No contract will be executed nor purchase order issued unless and until all required insurance certificates, in the required amount, are received. **All insurance MUST meet the following requirements:**

- Insured must be in the same name and address as the Bidder
- The insurance carrier must be rated "A" or better by AM Best
- The certificate holder must be the City of Philadelphia, and specifically named as an additional insured on the certificate in the "Description of Operations section".
- Certificate must be signed by an authorized representative of the insurance company/carrier

All certificates are to be sent to the Office of Risk Management, One Parkway, 1515 Arch Street, 14th Floor, Philadelphia, PA 19102, Attn. Debbie Lawton or FAX to (215) 683-1705.

3.2.7 **Upon request of the buyer, apparent low bidder must submit the manufacturers' list price book in Adobe Acrobat PDF file or CD ROM to the buyer and to the addresses listed below. Vendor must indicate the company name and bid number on the price list. List must be submitted within seven (7) calendar days from the issuance date of the request by the buyer. Failure to submit the list within that time frame will render bidder ineligible for award.**

For all invoices submitted, vendor must agree that pricing can be verified in the price list(s) submitted. If, during the term of the contract, a using agency orders an item(s) that cannot be found on the manufacturer's price list, vendor must, at the time of the order placement:

- **notify the using agency that the item cannot be found on the price list; and**
- **provide to the using agency and the Procurement Department written proof from the manufacturer of the list price of the item(s).**

Vendor must submit copies of all amendments, updates, etc. to the submitted price list(s) to the following:

- **If sending amendment, updates, etc in Adobe Acrobat PDF file, email to:** PRICEDESK@PHILA.GOV
- **If sending a CD ROM, mail to: Procurement Department, Price Desk, Room 150 Municipal Services Building, 1401 J.F.Kennedy Blvd., Philadelphia, PA 19102, ATTN: Price Desk Clerk**

All amendments, updates, etc. must reference the appropriate bid number and contract number.

Additional Addresses for Manufacturer's List Prices:
(to be in the either Adobe Acrobat PDF file or CD ROM)

Office of the Director of Finance
Bureau of Accounts
Municipal Services Building, 13th floor
Phila., PA 19102
Attn: Manager, Financial Verification & Accounting Section

City Controller
Municipal Services Building, 13th floor
Phila., PA 19102
Attn: Examination Supervisor

Procurement Department, Price Desk
Municipal Services Building, Room 150
Phila., PA 19102
Attn: Price Desk Clerk
email: PRICEDESK@PHILA.GOV

To any Using Agency from whom vendor receives a purchase order.

SECTION 4: CONTRACT MANAGEMENT

4.1 CITY OF PHILADELPHIA RESPONSIBILITY:

4.1.1 City agencies will be notified by Procurement of award(s) and will be provided with vendor(s), vendor contact(s) and applicable pricing. Departments will prepare and submit through the appropriate review channels, a requisition detailing their specific needs and requirements to Procurement. The Procurement Department shall then apply the requisition against the contract and issue a purchase order.

Order Against Contracts
Subsequent to contract conformance of a Requirements bid, purchase orders will be issued at such time that the product and/or service is needed. Such purchase orders will show if delivery is to be made upon receipt of order, or only after notification by the using department.

4.1.2 Invoices shall be submitted after delivery and acceptance of the product or service by the City. The City attempts to process invoices in a timely manner. Delays can occur because of incomplete or inaccurate invoicing information. Please make sure that invoices contain the following information to help the City process payments to the Contractor as quickly as possible.

(a) After the delivery or services have been completed the Contractor must submit three (3) copies of the invoice for payment to the receiving department listed on the purchase order.

(b) The invoice must correctly reference the purchase order number, the vendor name, address and Federal Employer Identification number.

(c) Checks will only be made payable to the company name as shown on the purchase order; the invoice must reflect this same company name as the "pay to".

(d) The invoice must show the quantity and type of item or service and the price.

(e) The unit of purchase on the invoice must agree with the unit cited on the purchase order. Reference to the specific line item is helpful.

4.1.3 The using agencies and departments are responsible for monitoring the services and/or products delivered as described in the contract. If any problems arise, a letter should be sent to the vendor requesting resolution by a specified date. A copy should be sent to the buyer. If vendor does not resolve the breach of contract by the requested date the matter should be turned over to the buyer.

4.1.4 **ADD-ONS:**
The City reserves the right to add, delete or change locations or to acquire other types of Office Furniture, steel, contemporary style that the vendor can supply that are similar to, but not specifically called for, in this bid. NOTE WELL: If the items to be acquired are contained on the price list submitted by the vendor, but are not specifically listed on the bid, no letter is required.

The items will be paid for at the discount listed in Section 5. If the items are not contained on the price list, the vendor must submit a letter on vendor's letterhead, listing the bid number, the period of the contract, the item(s) and the net price to the City.

The City, however, reserves the right to accept or reject the letter and to acquire the supplies or material in the open market. If the letter is accepted and approved by Procurement, it will automatically become part of the vendor's contract.

4.2 **VENDOR RESPONSIBILITY:**

4.2.1 Contractor may deliver only products, services or equipment (as applicable) as authorized in the contract and only after receipt of a purchase order or other authorized document from the Procurement Department. All orders must be in writing. Contractor shall not accept verbal delivery requests until after receipt of purchase order or other authorizing document from Procurement.

4.2.2 Contractor may deliver only products, services or equipment (as applicable) at the prices quoted in the contract and that are reflected on a purchase order or a change to a purchase order (a change to a purchase order is issued whenever the items, unit price, total amount, or terms and conditions change from the original purchase order).

4.2.3 Contractors may deliver products, services or equipment (as applicable) up to the dollar limit of the purchase order and for the period shown on the purchase order. Contractors are requested to carefully monitor obligations against purchase orders and inform the departments of anticipated funding shortfalls.

4.2.4 **DELIVERY:**
Unless otherwise specified in Section 2, noted by bidder in Section 5, and/or approved by the Using Agency, delivery of product and/or service will be made within 30 days from date requested by Using Agency. VENDOR NOTE: In Section 5, specify delivery if other than 30 days.

4.2.4.1 **Liquidated Damages:**
Liquidated Damages in the amount of 5% of the unit price may be applied to each item which exceeds the delivery schedule/requirement.

4.2.5 In the event that the contractor receives an order for products, services or equipment not specifically priced and incorporated into the contract, they must:

(i) bring this to the immediate attention of the Procurement Dept., and

(ii) notify the ordering agency in writing and refuse to deliver.

4.2.6 Should products, services, or equipment be delivered that are not specifically incorporated and priced into the contract, and/or be delivered without purchase order, the City shall have no obligation for payment.

4.2.7 For delivery of products or equipment, contractors shall honor and be paid for orders placed until the close of business of the date of purchase order expiration. Delivery of product may occur following purchase order expiration, so long as the order was placed prior to the purchase order expiration date.

4.2.8 **REPORTS**

4.2.8.1 **RECYCLED USAGE REPORTS**

If the successful bidder is supplying products/ services in this contract that have recycled content, indicate which item(s) contain this content in Section 5: Pricing, (under the applicable item) and the percentage of recovered material and post consumer material as it applies.

The successful bidder will be required, on a quarterly basis, to furnish a usage report of the recycled products purchased by City Departments. Two reports will be required:

a. **Departmental Report**
A report by purchase order, current and cumulative, showing item(s) delivered, description, date, quantity, price, extended amount and to the extent possible, the percent of recovered material in delivered items.

b. **Item Report**
A report, current and cumulative, by item, showing description, date, quantity, price, extended amount, and to the extent possible, the percent of recovered material and percent of Post-Consumer material in delivered items.

All reports are to be submitted to the Recycling Office, Room 780, Municipal Services Building, Philadelphia, PA 19102, Attn: Recycled Content Administrator.

In support of the City of Philadelphia's Recycling Program, bidders are encouraged to supply with their bid, any information available

regarding recycled material content in the products bid. The City is particularly interested in the type of recycled material used (such as paper, plastic, glass, metal, etc.); the percentage of recycled material contained in the product and the cost and product performance impact of increasing the percentage of recycled content.

The City also requests information regarding any known or potential material content in the product that may be extracted and recycled after the product has served its intended purpose.

Product bid contains recycled content? YES ☐ NO ☐

Is your product packaged and/or shipped in material containing recycled content? YES ☐ NO ☐

Is your product recyclable after it has reached its intended end use? YES ☐ NO ☐

Is your product shipped in returnable Containers? YES ☐ NO ☐

4.2.9 For all invoices submitted, vendor must agree that all pricing can be verified in the price lists submitted after award and on file in Finance, the Controller's Office and Procurement (see Section III above).

Vendor must submit agree that all pricing can be verified in the price list(s) submitted after award as per Paragraph 3.2.7 above. Vendor must submit copies of all amendments, updates, etc. to the appropriate address listed in Paragraph 3.2.7 above.

4.2.10 **Invoices/Receipts:**

4.2.10.1 Successful bidder(s) agrees not to invoice more than once per month.

4.2.10.2 Invoices should be sent in triplicate to each ordering department

4.2.10.2.1 One (1) original and two (2) copies fully itemized invoices.

4.2.10.2.2 See also item 4.1.2 above.

4.2.11 **PRICE INCREASE OR DECREASE:**

Prices herein are subject to increase or decrease in the event of any price changes in the general or published price established by the Manufacturer. Discount from Manufacturer's price list (as quoted in Section 5) must remain firm for the life of this contract (and any applicable renewal option), with the following exception: discount may be increased by vendor at any time during the contract period, to include any applicable renewals. Notice of all such changes shall be given in writing to the Procurement Department, Department of Finance and the Controller. This notice must be accompanied by the notice from the Manufacturer to the vendor showing the price changes. City reserves the right to review the propriety of the price rise and cancel the contract at its discretion.

Vendor must give 60 days notice of price increase, in writing, to the City. Notice shall be sent to the Buyer, Room 120 Municipal Services Building, 1401 JFK Blvd., Phila., PA 19102, referencing the Bid #, Contract # and period of contract.

Failure to notify the City within this sixty (60) day time frame shall result in the following:

the effective date of the price increase shall be sixty (60) days from the receipt of the price increase letter by the City;

OR

if the letter is not received before the last day of the contract period, the prices for the renewal period shall be the same as the prices for the previous contract period.

NOTE: **Price decreases may be forwarded to the Procurement Department buyer, in writing at any time during the contract period, to include any renewal period(s).**

4.2.12 **Failure to notify the City within the time frame specified in paragraph 4.2.11 will result in a commensurate delay in implementing the price change.**

4.3 **VENDOR ACCEPTANCES - IN SUBMITTING AN EXECUTED BID, THE BIDDER AGREES TO THE CONTRACT MANAGEMENT PROCEDURES IN THIS SECTION.**

SECTION 5: PRICING

(PRICES QUOTED MAY NOT EXCEED THREE (3) DECIMAL PLACES)

NOTE:
Unit Price(s) quoted below (Section 5: Pricing), will prevail in case of any discrepancy(ies) between Unit Price and "Amount" and will be the determining factor in establishing applicable contract amount(s)/award.

DO YOU CERTIFY THAT ITEM BID MEETS SPECIFICATIONS?

YES ☐ **NO** ☐

IF NO, STATE DEVIATIONS

43010 001

5.1 Bidders will price as follows:.

		LIST PRICE	**NET PRICE TO CITY**
5.1.1	Type 1, double pedestal desk, nominal 60" x 30", with center drawer	$_____	$_____
	State Manufacturer and Model Number: _____		
5.1.2	Type 2, overhang desk, 72"x 36", with center drawer – for executive personnel	$_____	$_____
	State Manufacturer and Model Number: _____		

		LIST PRICE	**NET PRICE TO CITY**
5.1.3	Type 3, Single pedestal desk, nominal 45" x 30", left or right pedestal, with center drawer	$_____	$_____
	State Manufacturer and Model Number: _____		
5.1.4	Type 5, "L" assembly, consisting of two L units, 60" x 30" and 42" x 18" level top surface, drawer pedestal in each, includes center drawer.	$_____	$_____
	State Manufacturer and Model Number: _____		
5.1.5	Type 5A, same as type 5 except sizes: 66" x 30” and 42" x 24".	$_____	$_____
	State Manufacturer and Model Number: _____		
5.1.6	Type 6, "L" assembly, consisting of two L units, 60" x 30" with drawer pedestal and 42" x 18" the latter being depressed and with one (1) personal drawer and two (2) box drawers with stationery storage compartment. Includes a center drawer.	$_____	$_____
	State Manufacturer and Model Number: _____		
		LIST	**NET PRICE**

		PRICE	**TO CITY**
5.1.7	Type 6A, same as Type 6 except sizes are: 66" x 30" and 42" x 24" **State Manufacturer and Model Number**: _____	$_____	$_____
5.1.8	Type 7, "L" assembly, consisting of two L units, a 60" x 30" with drawer pedestal, and a 42" x 18" panel end top without the storage pedestal, includes a center drawer. **State Manufacturer and Model Number:** _____	$_____	$_____
5.1.9	Type 7A, same as Type 7 except sizes 66" x 30" and 42" x 24". **State Manufacturer and Model Number**: _____	$_____	$_____
5.1.10	Type 8, Credenza, various design to harmonize with desk, for for Category "E" only. **State Manufacturer and Model Number:** _____	$_____	$_____
5.1.11	Type 9, Credenzas, various design to harmonize with desk, for Category "E" only. **State Manufacturer and Model Number:** _____	$_____	$_____
		LIST	**NET PRICE**

		PRICE	**TO CITY**
5.1.12	Type 10, Credenzas, various, design to harmonize with desk; for Category "E" only.	$_____	$_____
	State Manufacturer and Model Number: _____		
5.1.13	Type 11, Flat top table, no drawers, 60" x 30", four legs, open.	$_____	$_____
	State Manufacturer and Model Number: _____		
5.1.14	Type 12, overhang conference table, 72" x 36", four legs, open.	$_____	$_____
	State Manufacturer and Model Number: _____		
5.1.15	Type 13, Bookcase, four shelf (3 adjustable); 36" width, nominal height 54"; without sliding glass doors.	$_____	$_____
	State Manufacturer and Model Number: _____		
5.1.16	Type 13, Bookcase, four shelf (3 adjustable); 36" width, nominal height 52"; with sliding glass doors.	$_____	$_____
	State Manufacturer and Model Number: _____		

TOTAL $_____ $_____

DIFFERENCE (LIST TOTAL MINUS NET TOTAL) $_____

DISCOUNT (DIFFERENCE DIVIDED BY LIST TOTAL) _____%

BIDDER TO STATE HOW PRODUCT IS TO BE DELIVERED TO THE CITY OF PHILADELPHIA: (E.G. ON-SITE DELIVERY VIA AWARDED VENDOR'S TRUCK, UNITED PARCEL, U.S. POSTAL SERVICE ETC.).

TYPE OF TRANSPORT:_____

BIDDER SHALL SPECIFY IF DELIVERY IS OTHER THAN 30 DAYS: _____

CITY OF PHILADELPHIA
PROCUREMENT DEPARTMENT
SPECIFICATION

No. 17-O-1f:97
supersedes 17-O-1e:92
Effective Date: 3/31/97

OFFICE FURNITURE, STEEL CONTEMPORARY

1. **CLASSIFICATION -** This specification covers a group of related pieces of furniture, in contemporary rectilinear design, with plastic laminate tops. The desks and tables shall be of the four-leg type and shall inter-member to form various assemblies. The furniture shall be available in a number of categories and types, as outlined herein.

Type 1	Double pedestal desk, nominal 60” x 30” with center drawer.
Type 2	Overhang desk, 72” x 36” - executive personnel with center drawer.
Type 3	Single pedestal desk, nominal 45” x 30”, left or right pedestal with center drawer.
Type 5	“L” assembly, consisting of two L units, 60” x 30” and 42” x 18” level top surface, drawer pedestal in each, includes center drawer.
Type 5A	Same as Type 5 except sizes 66” x 30” and 42” x 24”.
Type 6	“L” assembly, consisting of two (2) L units, 60” x 30” with drawer pedestal and 42” x 18”, the latter being depressed and with one (1) personal drawer and two (2) box drawers with stationary storage compartments. Includes a center drawer.
Type 6A	Same as Type 6 except sizes 66” x 30” and 42” x 24”.
Type 7	“L” assembly, consisting of two L units, a 60” x 30” with drawer pedestal, and a 42” x 18” panel end top without storage pedestal, includes a center drawer.
Type 7A	Same as Type 7 except sizes 66” x 30” and 42” x 24”.

NOTE:
Types 5 thru 7 are available with auxiliary at left or right as requested.

The “A” units for Types 5, 6 , and 7 are for use with word processing and computer terminals. Most terminals require 24 inches' depth on the “L” runoff.

Types 8, 9 & 10 Credenzas, various, design to harmonize with desk; for Category "E" only.

Type 11 Flat top table, no drawers, 60" x 30, four legs, open

Type 12 Overhang conference table, 72" x 36", four legs, open

Type 13 Bookcase, four shelf (3 adjustable); 36" width, nominal height 54" available with or without sliding glass doors, as required.

2. **APPLICABLE SPECIFICATIONS** - The following specifications of the latest issue in effect on the date of the Invitation to Bid shall form a part of this specification:

American National Standard For Office Furnishings - Desk Products
Tests ANSI./BIFMA x 5.5 - 1989

Military Spec C - 490 Cleaning

3. **REQUIREMENTS:**

3.1 - **Material**

3.1.1 **Steel** - The steel sheets used for all exposed parts shall be cold—rolled, stretcher, leveled standard of flatness as defined in Table 24 of Steel Products Manual, full pickled and oiled. The gauges shall be the Manufacturers' Standard Gage for Steel Sheet.

3.1.1.1 **Gauge Parts** - The gauges and decimal equivalents cited are nominal. The deviation from the specified thickness shall not be greater than one-half (1/2) the difference between the specified gauge and the next thinner gauge.

GAUGE THICKNESS

End Panels		20	.0359
Back Panels		20	.0359
Center Drawer:	Body	22	.0299
	Front	22	.0299
	Track	18	.0478
Pedestal	Sides	20	.0359
	Back	20	.0359
	Top Cross-piece	20	.0359
	Bottom	20	.0359
	Horse Collar	20	.0359(Miq welded)

Box and File		
Drawer Suspension	16	.062
Channels	20	.0359
Follower Block	20	.0359
Box Drawer Dividers	18	.0478

	GAUGE	THICKNESS
Drawer Body	22	.0299
Drawer Front	22	.0299
Inside Front	24	.0239

3.1.2 **Face Hardware** - The face hardware shall be satin finished chromium on steel, or on die-cast zinc or satin aluminum. Flush face with recessed pulls are an acceptable alternate

3.1.3 **Legs -** Legs are to 1" square tubing, chrome plated, nominal corner radius of 1/32" and may be brushed finish. To be full height from under side of desk top to floor. Legs are to be equipped with snap-in leveling glides, minimum adjustment ½". The bending resistance of the leg structure must be equal to or exceed that of a 1 inch square box section of 16 gauge carbon steel tube of equal strength

3.1.4 **Cleaning -** All metal surfaces, except exposed hardware and legs (chrome) shall be cleaned and the surface prepared for finishing in accordance with a method described in Military Specification MIL-C-490.

3.1.5 **Finish of Enameled Portions** - Enamel shall be of the baking water based alkyd type and shall be applied by the spray method, to provide a minimum dry film thickness of 1.0 mils per coat. All wearing surfaces and areas such as drawer heads, end panels and back panels shall have a minimum of two coats. Special attention shall be given to the bottoms and the interior to ensure that all surfaces are adequately covered to protect them against rust. The enamel shall withstand the test described in Section 4 below.

3.1.6 **Workmanship -** All workmanship is to be first-class. Surfaces and finishes are to be clean and free of nicks and scratches. Paint is to completely cover the surfaces. No glue, dirt, grease etc. Shall be on the unit. All edges are to be folded so that no sharp edge is exposed. There shall be no pits or burrs.

3.2 CONSTRUCTION

3.2.1 **Design** - The design shall be as shown in the attached drawings, and as further exemplified by standard prototype samples adopted by the City. Minor deviations therefrom will be considered at the sole option of the Procurement Commissioner.

3.2.1.1 **Category P - Public Access**

Top - To be selected from manufacturer's standard colors.
Bottom - To be selected from manufacturer's standard colors.
Legs and Hardware - Satin/chrome finish

3.2.1.2 **Category G - General Use**

Top - To be selected from manufacturer's standard colors.
Bottom - To be selected from manufacturer's standard colors.
Legs and Hardware - Satin/Chrome finish

3.2.2 **Tops**
Tops are to be made with a wood fiber core. The core is to be a minimum of one (1-1/4" inch thick) and shall be plywood, flake board, particle board (45 lb. Density min.) or similar material. No honeycomb construction acceptable. The back shall have a sealer sheet. The top is to be a plastic laminate, bonded under high pressure. The edges shall be covered with the same plastic laminate. Edges of the laminate are to be prepared in the best trade practices. The glue used is to be waterproof. Back sheet is to be the same composition as top sheet to prevent warping.

3.2.3 **Pedestals**
Bottoms and backs of all pedestals are to be closed.

3.2.4 **Drawers**

All pedestal drawers are to full depth of the pedestal. Full length is defined as not less than 75% of the depth of the desk or of the L return. Letter drawers may be placed at the top or bottom of the pedestal, as required.

Shallow drawers (18-24 inches front to back) are to utilize full cradle ball bearing type suspension that will allow the drawer to extend fully out of the pedestal.

3.2.4.1 **Adelphia Letter Drawers** - Heavy 22 gauge drawer body with round smooth corners, all sides hemmed for extra strength. Each drawer is inter changeable and contains a positive locking follower block. High file drawer sides are standard for folder frames.

3.1.4.2 **Storage Drawers** (**Box Drawers**) - Storage drawers shall have as standard equipment, one removable partition, metal or plastic, which is to be adjustable on maximum 1-1/2" centers. The drawers are to be mounted as standard on smooth operating, cold drawn suspension members of steel which are to be formed to eliminate raw edges.

Box and File Drawer Suspension **-** Front to rear, three section, full extension, suspension with over-travel. Features a positive "out-stop" and a "hold-in catch" (prevents bounce back). Contains 4 hardened steel precision ball bearings and urethane bumpers cushions for a smooth silent operation. Provides for easy drawer removal (without tools) and has a loan rating of 200 pounds. Suspension is finished in Bright Zinc Chrome.

Gauge	16	.062

3.1.4.3 Bearings may be substituted for glides. Cushion stops are to be provided to ensure silent operations when the drawer is opened or closed.

The drawer sides are to channel formed and slotted for accommodating the adjustable partition.

3.2.4.4 **Center Drawers** are to be not less than 18" deep. The center drawer body shall be manufactured with the sides and bottom formed in one piece of sufficient gauge to prevent buckling.

The drawer shall be equipped with a convenience tray, which is to be divided into compartments, providing storage for pins, clips, and one large compartment for pencils. The center drawer body shall be equipped with cold drawn channel suspensions, to provide smooth and silent operation with bearings and glides.

The drawers are to be mounted on smooth operating case channel assemblies with a positive stop.

3.2.5 **Backs**

All desks are to be furnished as standard with a full one piece back panel that is fitted flush with the outside surface of the supporting legs and the top.

All backs are to be flanged and punched on all edges and attached to the supporting legs, pedestals and the top assembly.

The bottom flange is to be folded to eliminate a raw edge in the knee space area of the desk.

3.2.6 **End Panels**

End panels will be of the flush type. End or side panels to fasten to legs and pedestal.

3.2.7 **Drawing Locking Arrangements**

The lock to be located on and control the center drawer in addition to all pedestal drawers.

Lock on double pedestal desk are to keyed different, unless otherwise specified. Locks on single pedestal desks are all to be keyed different, unless otherwise specified. All locks are to be of a semi-paracentric, grooved key, plate tumbler type core removable and mastered keyed.

3.2.8 **Drawer Pull**

The drawer pulls shall be of the materials specified in Face Hardware. All surfaces and edges shall be ground smooth to eliminate roughness and sharp edges. Pulls shall be securely attached with screws which may be recessed-surface mounted to the inside of the drawer head. Recessed drawer pulls are to be clean and smooth with no sharp edges or burrs.

3.2.9 **Extended Desk Arrangements**

The styling and construction of extended desk arrangements shall be the same as the desk and table. These units are to be made in both typing and desk heights.

The tops, end panel inserts, and backs are to be the same construction and gauges of materials as the desks.

3.2.10 **Credenzas**

The credenzas shall be desk height, with approximate dimensions as indicated on Drawings for Types 8, 9 and 10. They may be composed of modular units as shown in these drawings. They shall be of manufacturer's standard design to match the desks described herein. They shall be available only for Category E. Tops are to be of the same general construction as desktops. Units are to be constructed to permit various arrangements of drawer and storage cabinets. The credenzas shall be available in 60" and 75" lengths. The modular component storage cabinets shall be available in two widths, 15" and 30". All 15" cabinets shall have doors; 30" cabinets shall be available with and without doors. 30" may be either hinged or sliding doors. Doors shall be double wall construction with sound deadening material. They are to be equipped with snap catches, rubber bumpers and one pull.

Hinges are to be located at the top and bottom edges and positioned so as to provide for full door swing. Storage cabinets shall be equipped with one adjustable shelf. Legs may be either inboard or outboard configuration. See Drawings Types 8-9-10.

The illustrations reflect the overall sizes and number of pedestals per credenza. Actual orders may vary the locations of specified pedestals and the particular pedestals desired in any credenza.

3.2.11 **Overhang Desks**

These are available for executive personnel. They shall be constructed in the same manner as the normal double pedestal desk, except that the tops shall be constructed in accordance with paragraph 3.2.2 above. The dimensions of the top shall be 72" x 36" with a full 6" rear overhang. See Drawing Type 2.

3.2.12 **Overhang Tables**

Shall be constructed in the same manner as the Type II table, except that the tops shall be a plastic laminate with the same laminate for edge cover. The dimensions of the top shall be 72" x 36" with symmetrical overhang in both length and width. See Drawing Type 12.

3.2.13 **Bookcase** (against the wall type)
The bookcase shall be nominally 54" high and 36" wide, shall have three adjustable shelves in addition to a fixed bottom shelf. The three movable shall be adjustable in not greater than 2" increments and shall have a useable depth of not less than 11". The front of the base may be recessed to a height of approximately 3". The case is to approximately 12" deep for open design.

If glass doors are specified, the depth is to be approximately 15". If specifically requested in the Invitation to Bid, the bookcase shall be furnished with polished plate glass sliding doors, traveling in top and bottom tracks with reduced friction slides in the lower tracks. Doors shall be provided with hand holds; glass shall be nominal 7/32" thick and exposed edges shall be ground smooth. See Drawing Type 13.

3.3 **General Assembly**
The general assembly shall be such as to provide maximum rigidity and for the replacement of any unit assembly in the field with ordinary hand tools.

3.4 **Guarantee and Service Requirements**
The vendor shall guarantee the units against defective construction and shall agree to provide, as needed, corrective service for a period of one year from date of delivery, in connection with malfunctioning components including, mechanisms, intermembering hardware and latent defects.

3.5 **Workmanship**
The units shall be constructed in accordance with the requirements set forth herein and shall be similar in design to the drawings which form a part of this specification. The edges of all parts and sheets shall be further protected by folding, beading, flanging or grinding to eliminate possible injury from burrs or raw edges. The units shall be free from any defects which might affect the durability, serviceability or appearance and shall be capable of withstanding the applicable tests specified in Section 4 below.

3.6 **Samples**
Any bidder may be requested to submit a sample unit for testing, examination and evaluation. Delivery must be within 10 days of request.

Further, any bidder receiving an award for a "requirements contract" awarded utilizing these specifications may be required to submit a sample desk for exhibit to users. The desk will be put into use and retained for the life of the contract.

At the expiration of the contract, the bidder may reclaim the sample by giving 15 days written notice of intent and removing the unit at the proper time.

In all cases the expense will be borne by the vendor.

4. INSPECTION AND TEST PROCEDURES

4.1 The City reserves the right to inspect and test random samples from any delivery to determine compliance with this specification. This inspection at the City's option, may be made during manufacture, at point of shipment, or upon delivery.

4.2 At the City's option, it may conduct on samples furnished by contractor, any or all of the test specified in ANSI/BIF MA X5.5-1989.

5. PACKAGING AND DELIVERY

Commercial packing is acceptable and all furniture ordered to this specification shall be delivered and set-up in place, ready-to-use, at the specific location(s) called for in the Invitation to Bid or Purchase Order. This requirement does not preclude delivery, knocked-down, of component units, provided they are then completely assembled at the final location by the Contractor, who will remove all packing and crating materials and other debris from the premises.

6. NOTES TO REQUISITIONING AGENCY

To order furniture under this specification, the agency shall furnish the following information of the requirements:

1. Office Furniture, Steel
2. This Specification Number
3. The Type Number and Name of Item
4. The Size
5. Left or right hand pedestals or auxiliaries (as applicable)
6. Options, such as sliding reference shelf, stationary typing shelf
7. The Quantity of Each
8. The Specified Location for Delivery (Room Number or Floor Area)
9. For Bookcase, specify whether sliding glass doors are required.
10. Colors

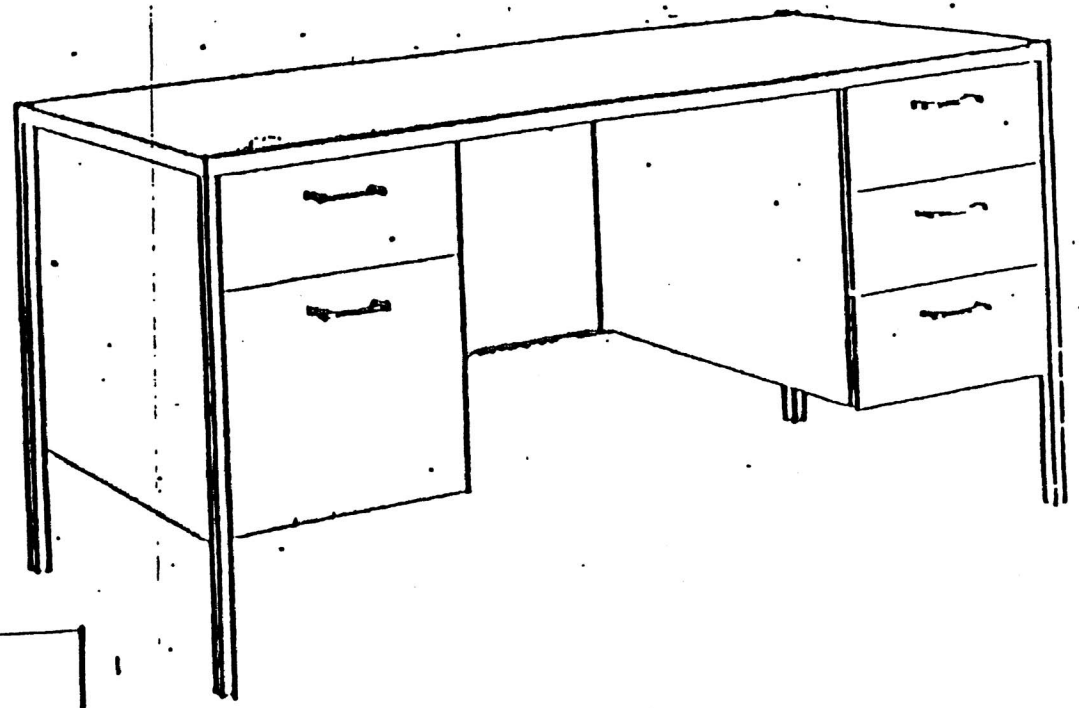

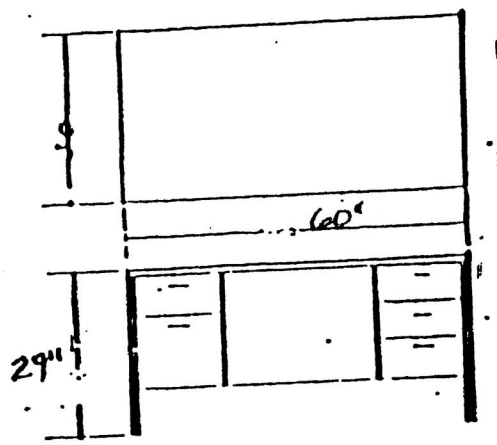

TYPE 1

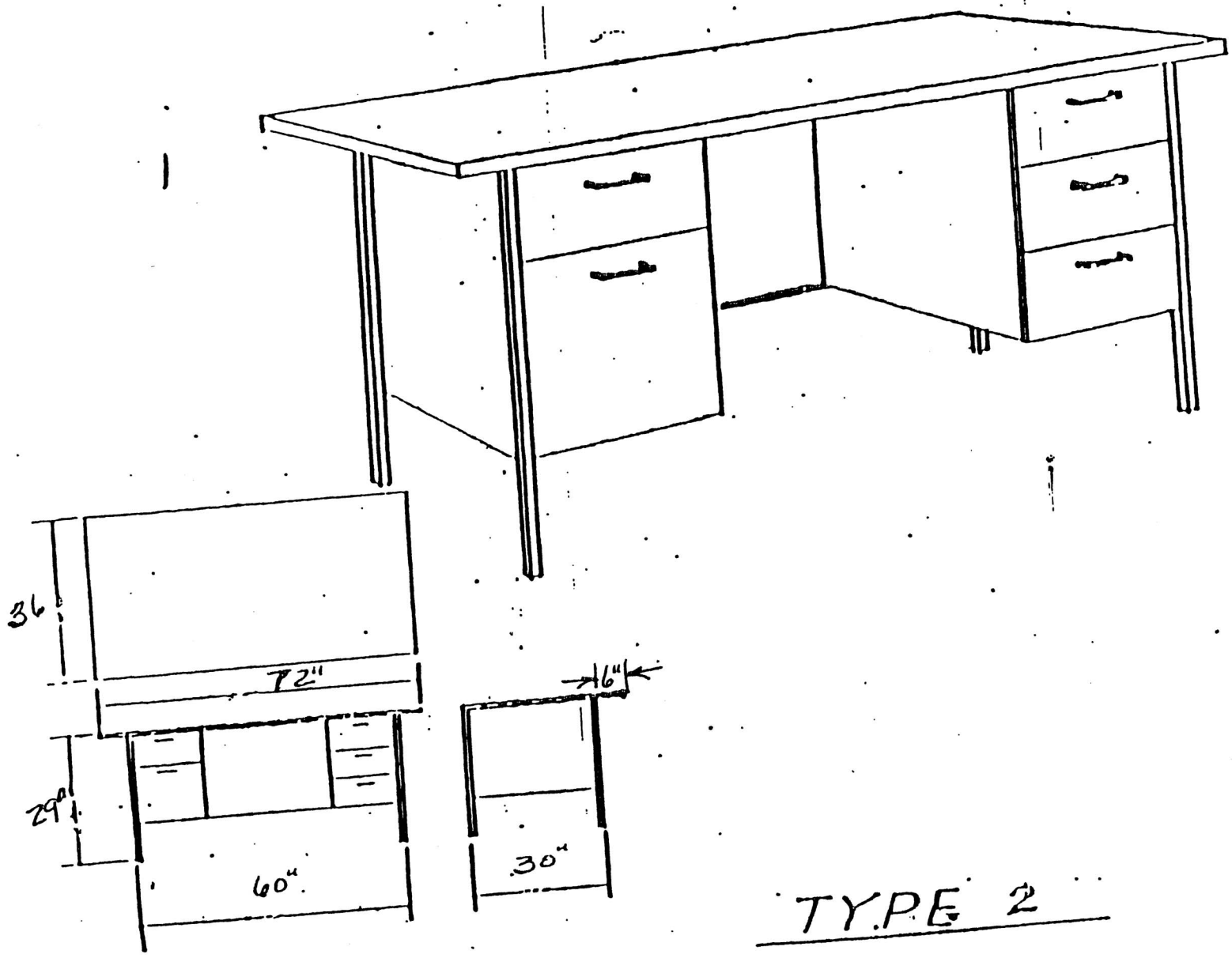

TYPE 2

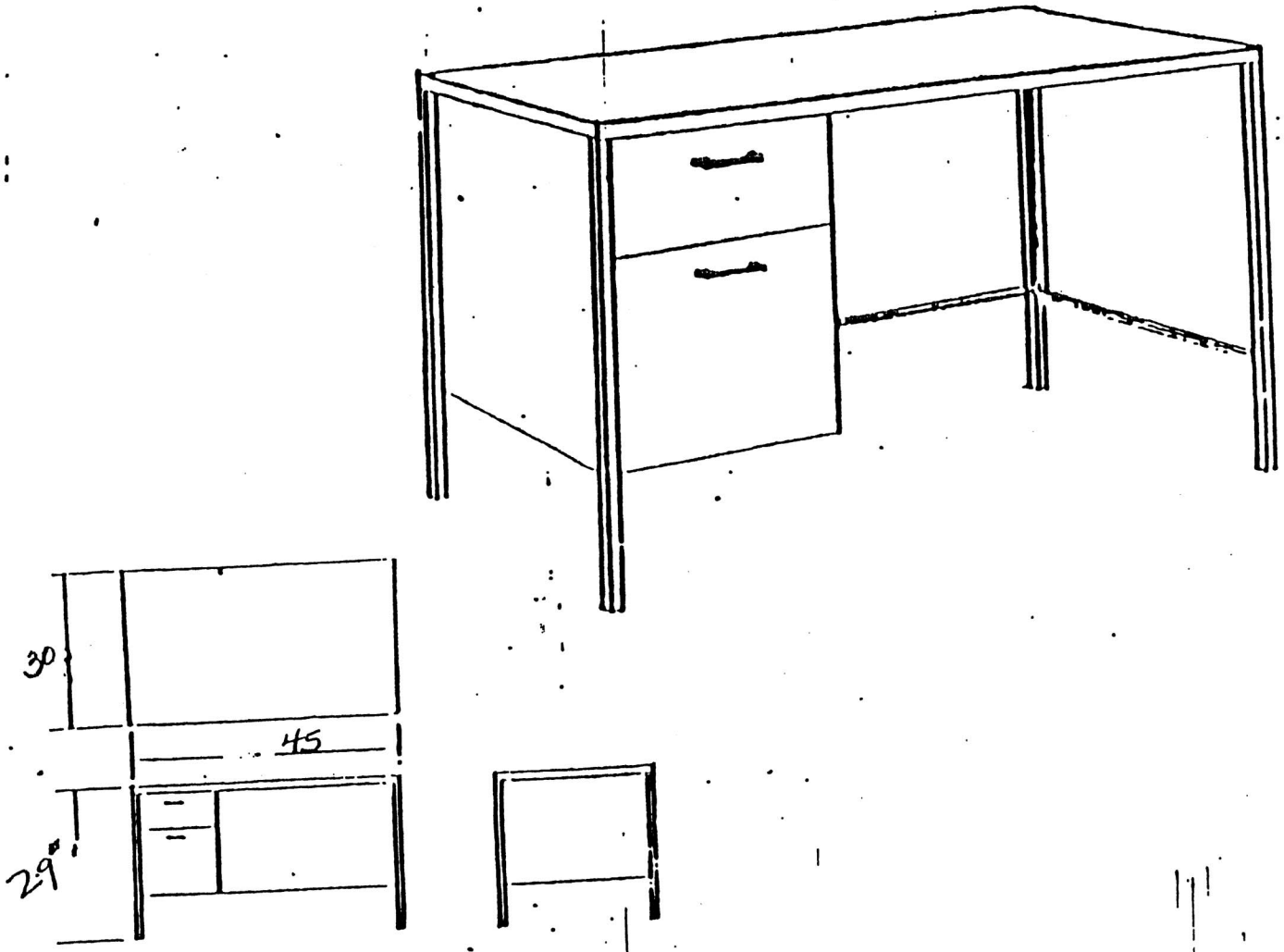

TYPE 3

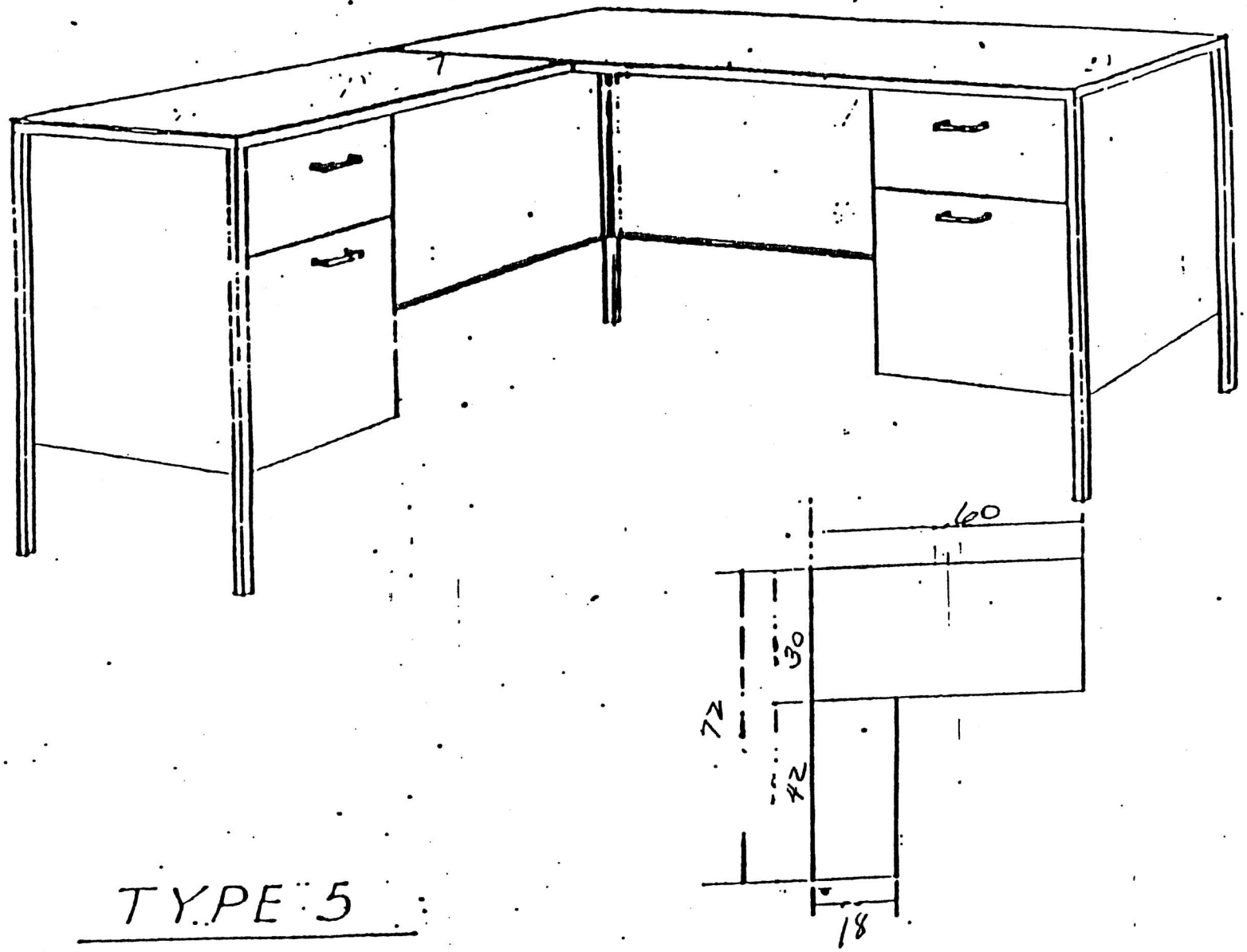

TYPE 5

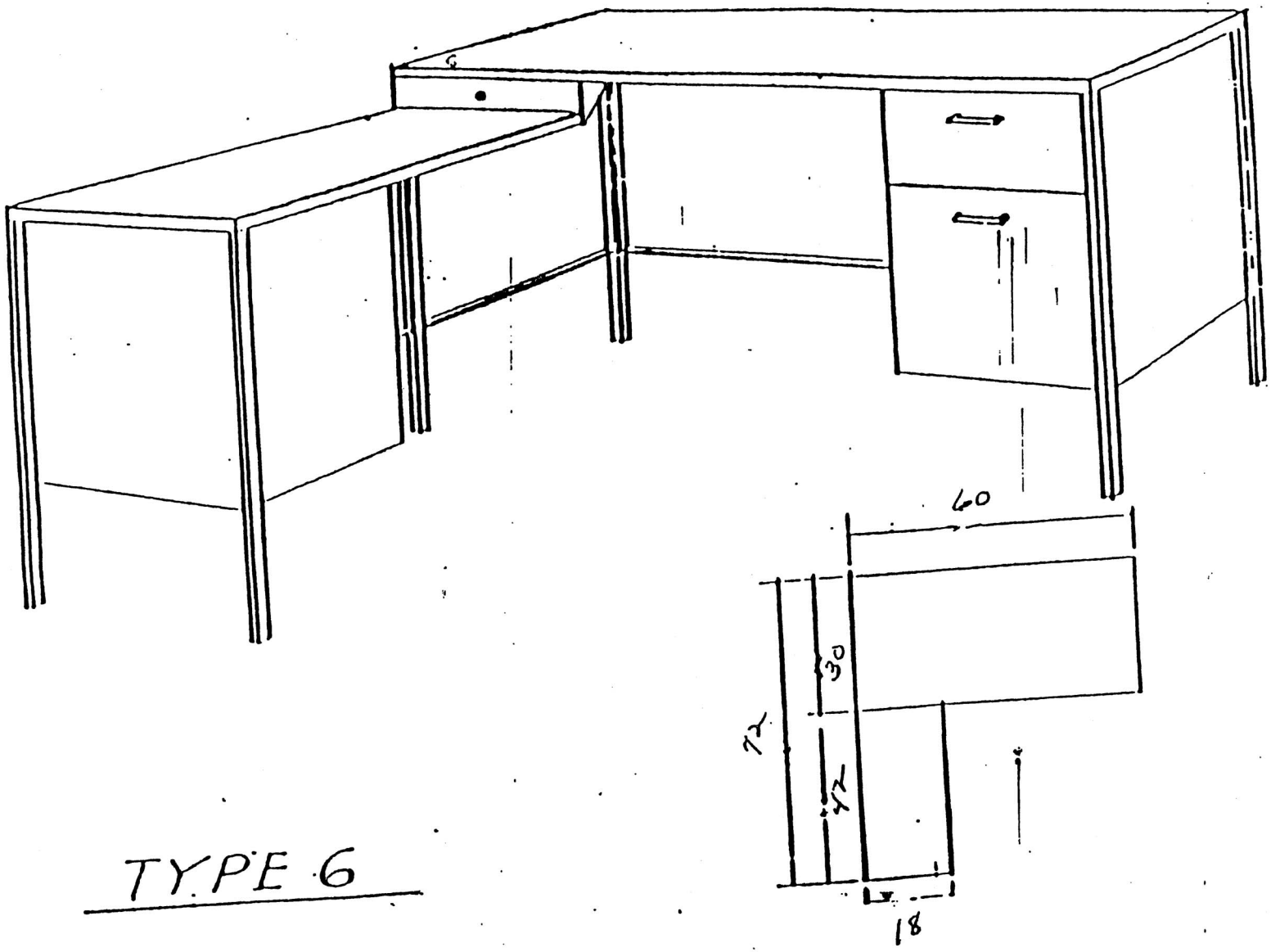

TYPE 6

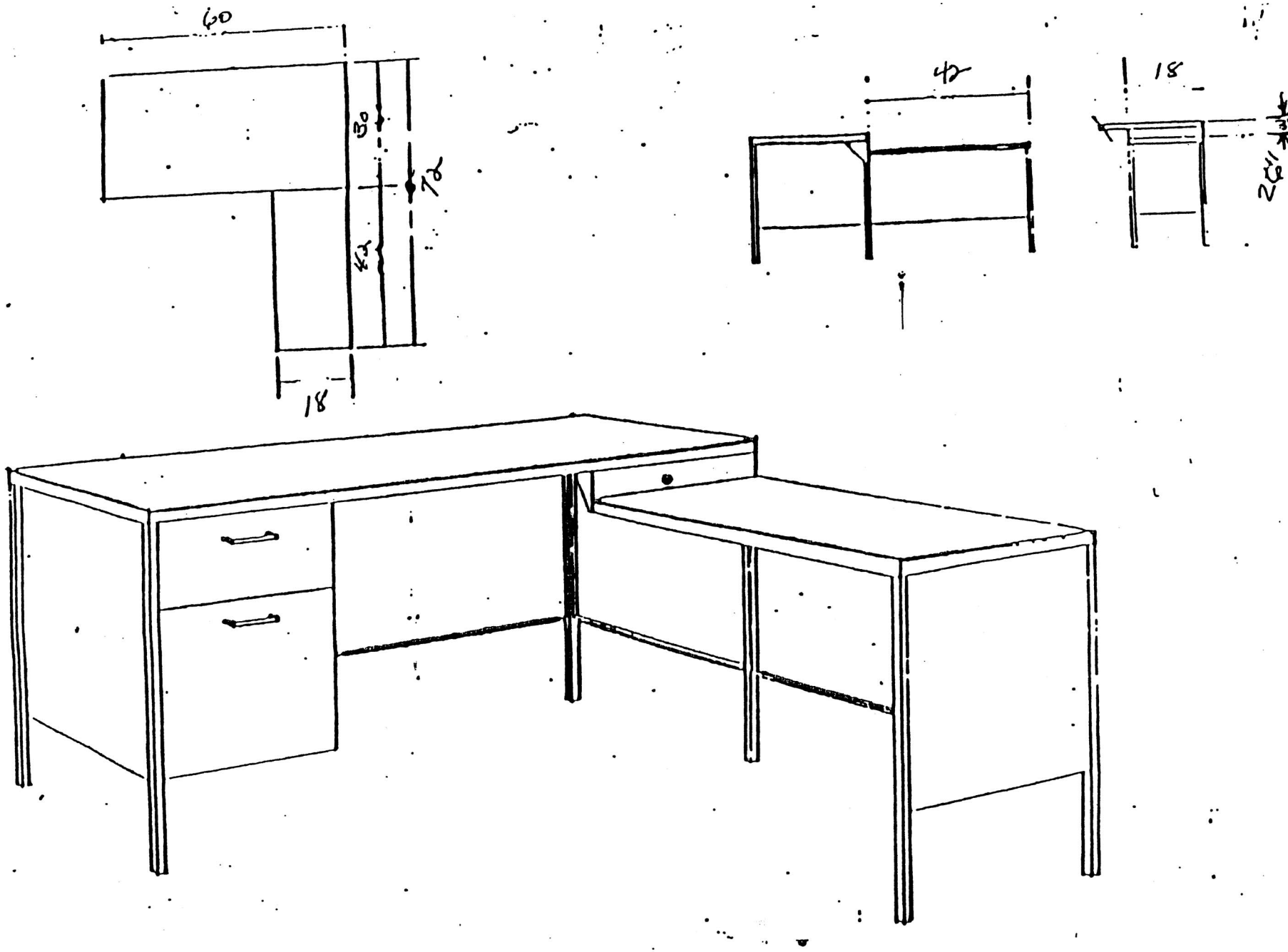

TYPE 7

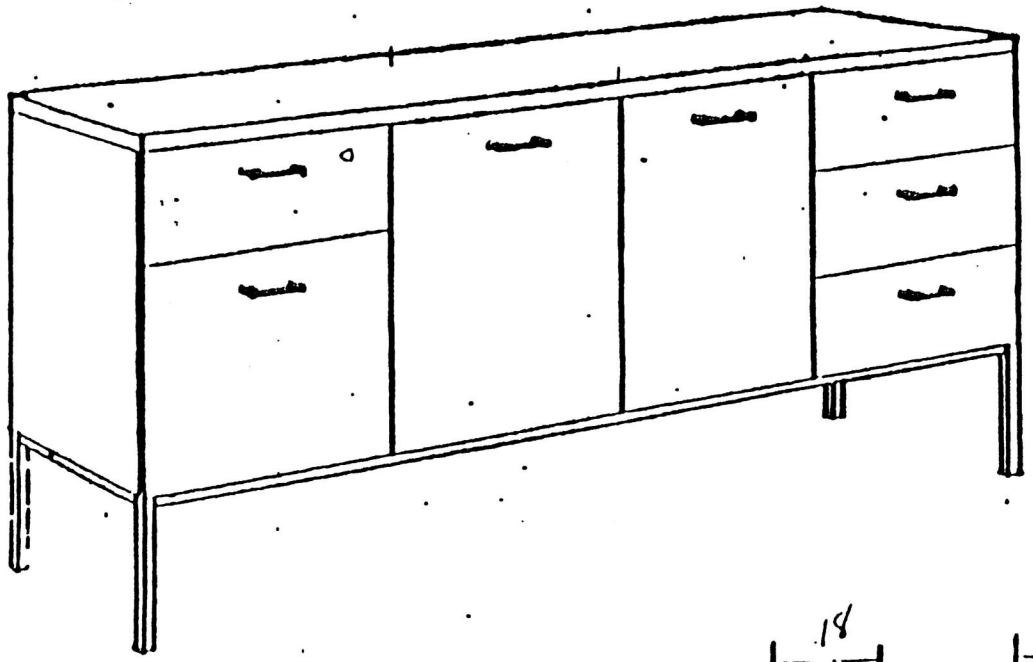

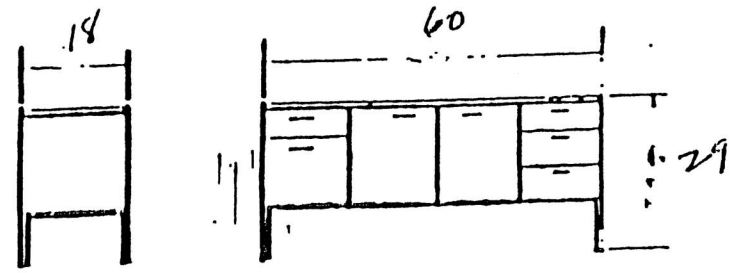

TYPE 8

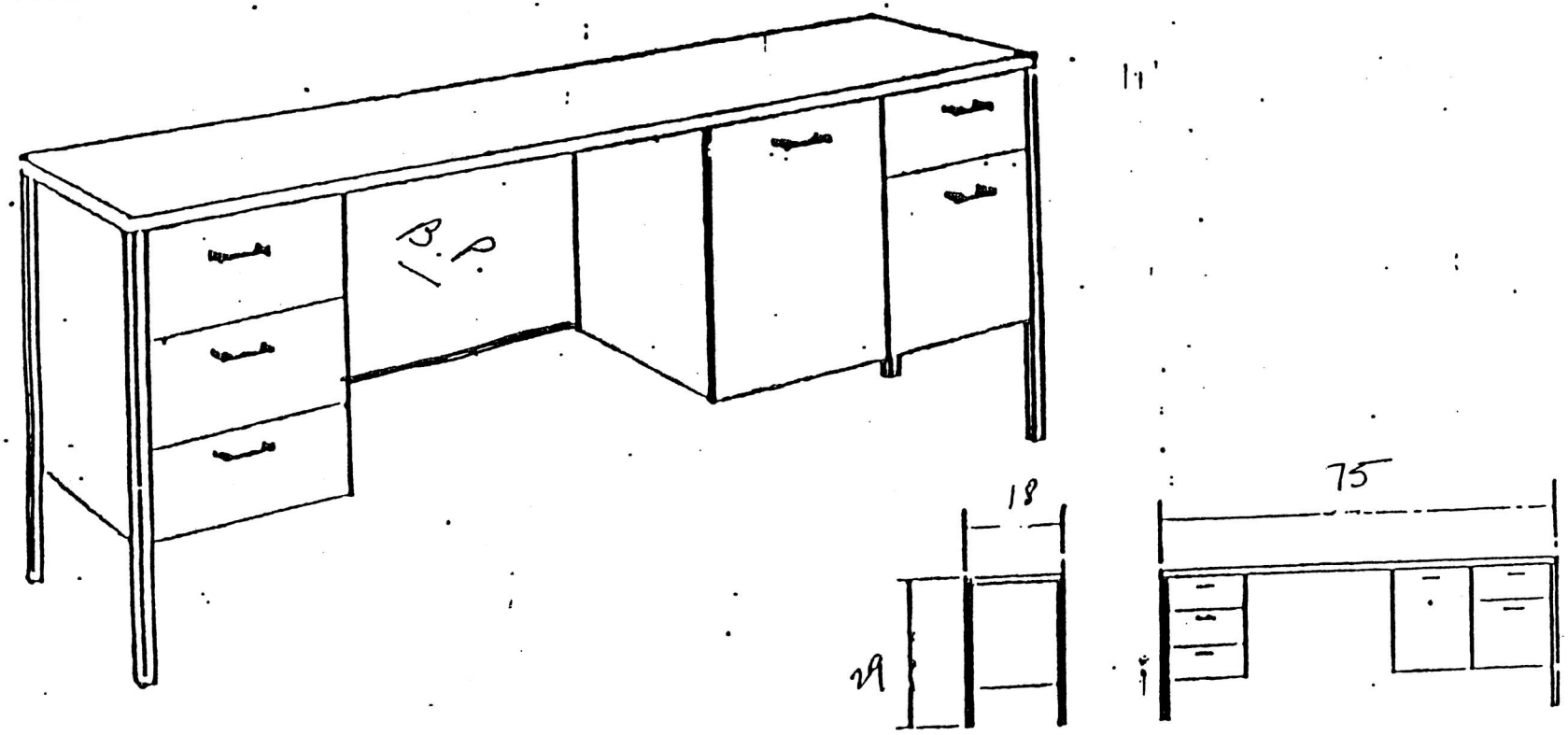

TYPE 9

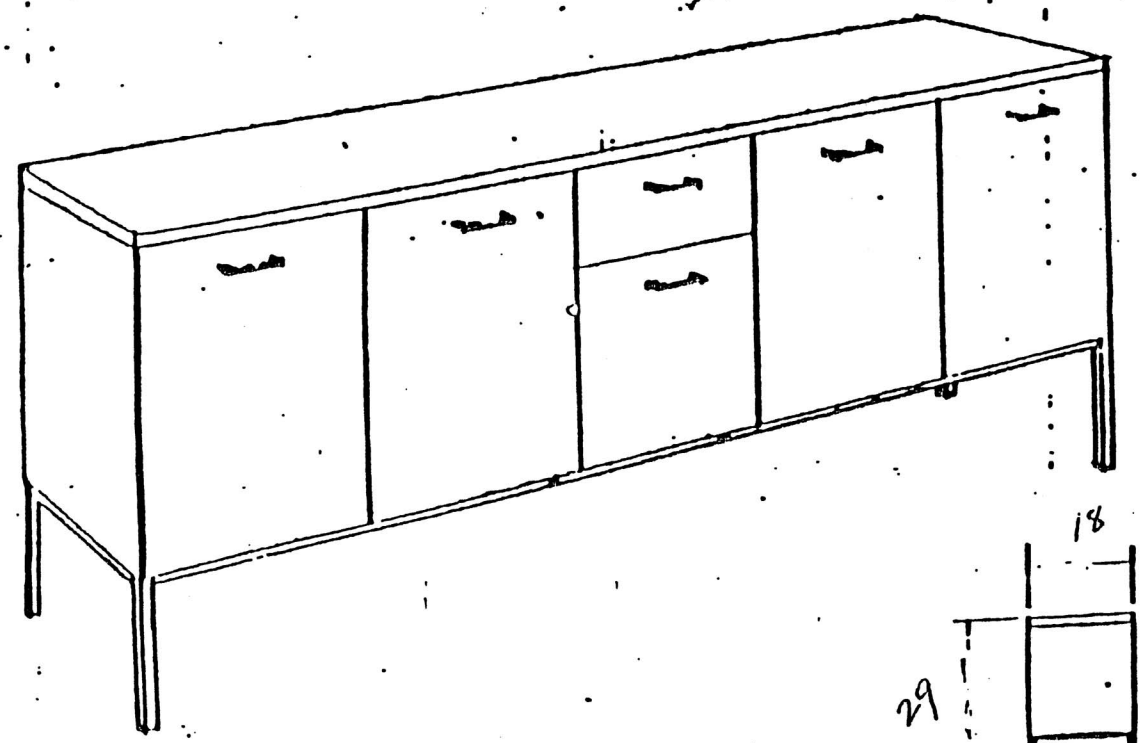

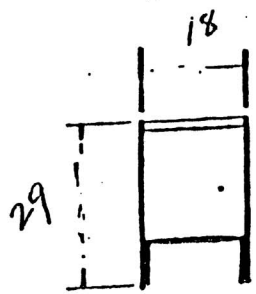

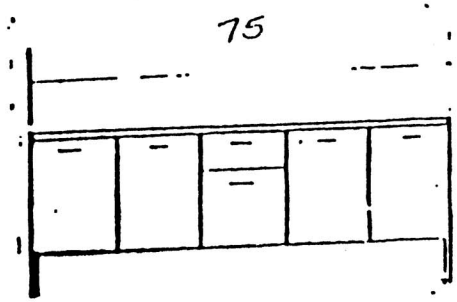

TYPE 10

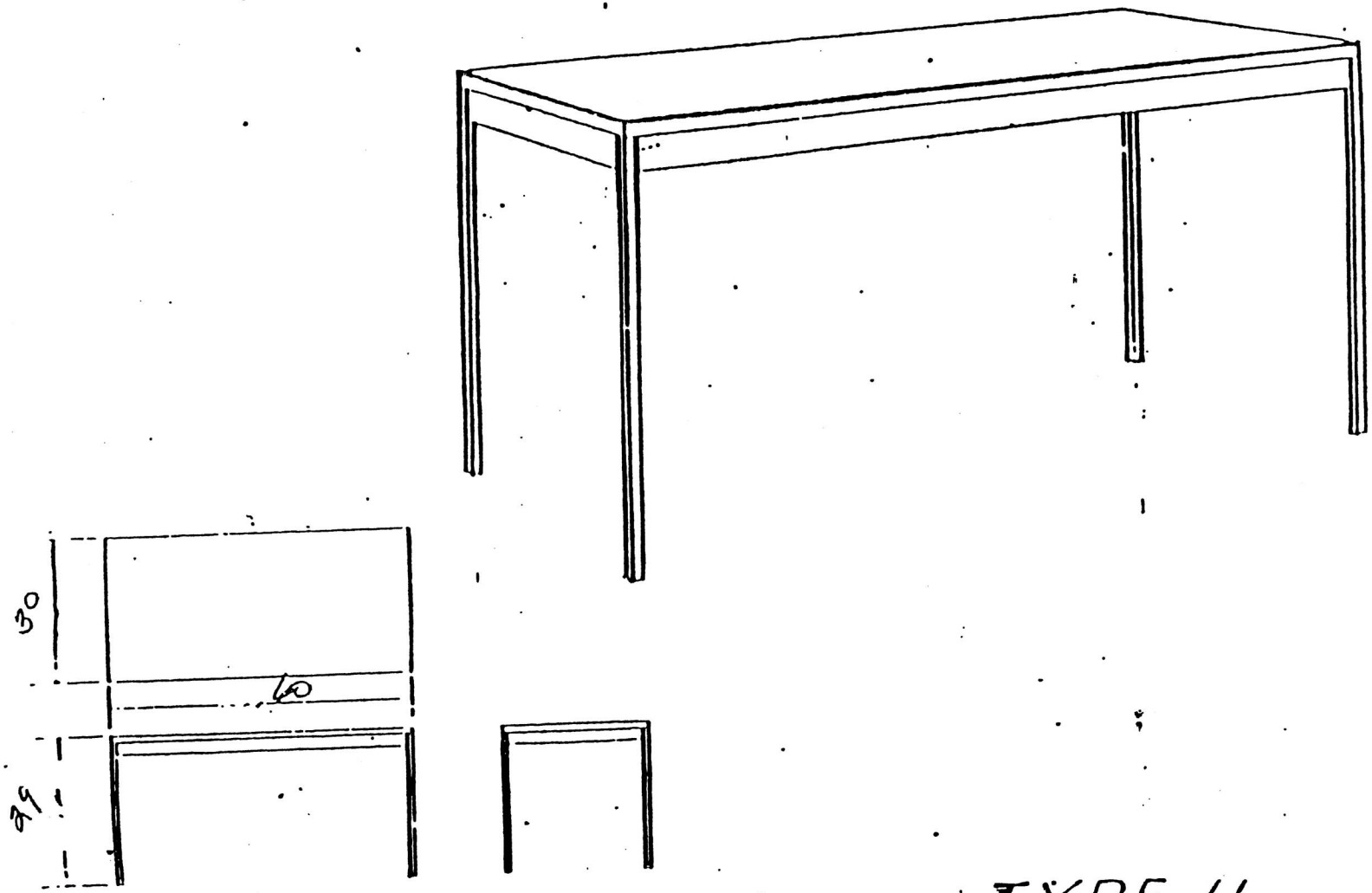

TYPE II

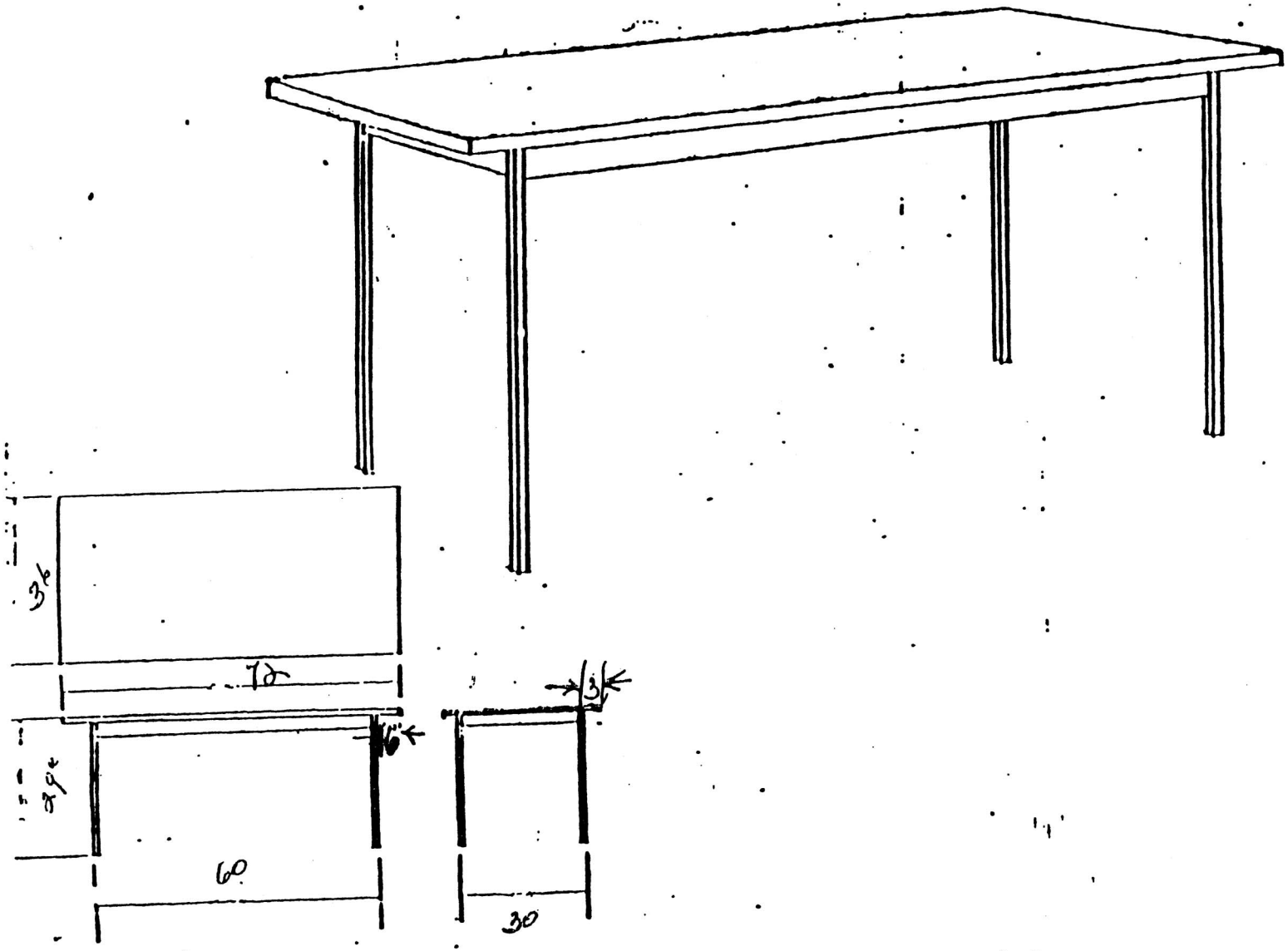

TYPE 12

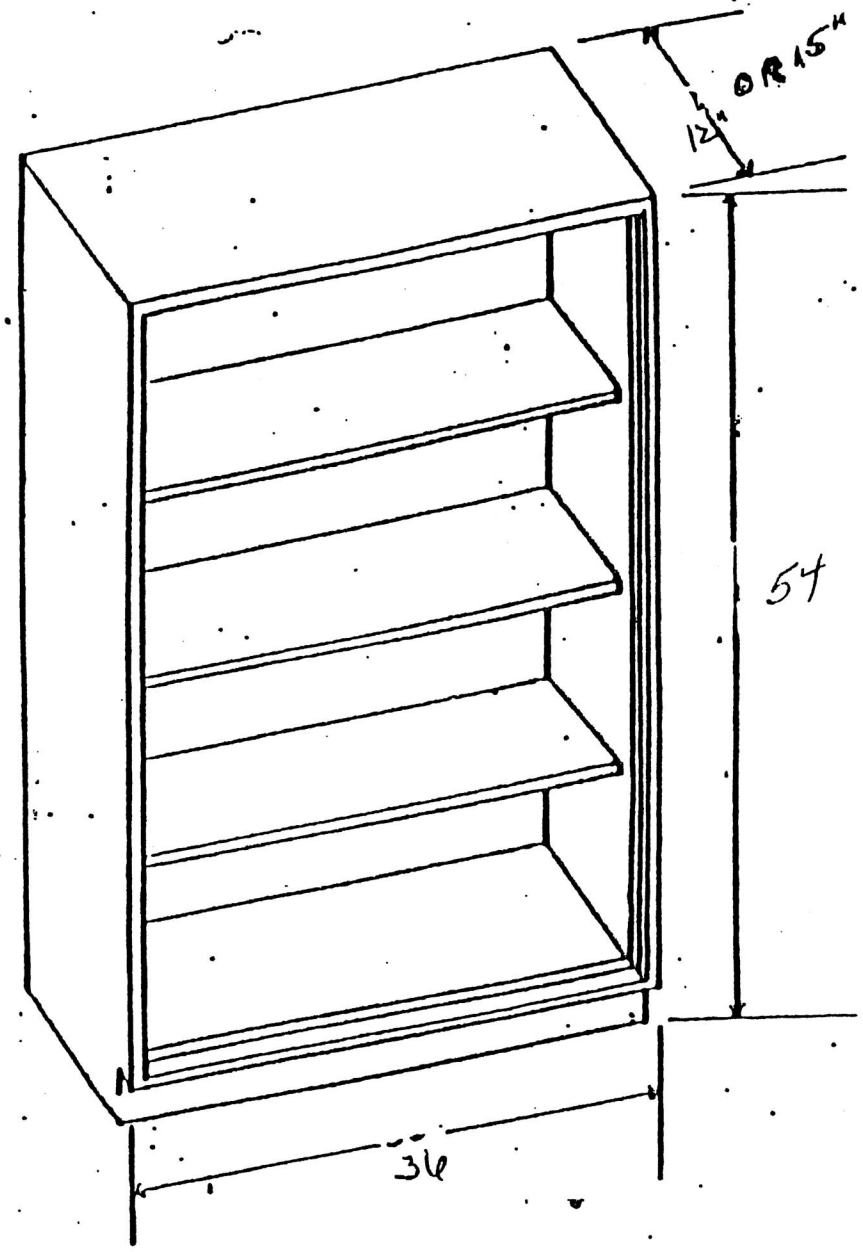

TYPE 13

Attention Bidder:

This bid document may not contain all of the documents that you will need to complete the bid submission. On occasion, it is not possible to include the following:

Exhibits
Drawings
Attached specifications
Attached documents

If you have not received a corresponding attachment, drawing or exhibit that is referenced in the bid document you may obtain it by contacting the Public Information Unit at 215-686-4720.

C I T Y O F P H I L A D E L P H I A

INSTRUCTIONS FOR GETTING PAID BY THE CITY OF PHILADELPHIA

The City attempts to process invoices in a timely manner. Delays can occur because of incomplete or inaccurate invoicing information. Please make sure that all your invoices contain the following information to help the City in paying you as quickly as possible.

1. **AFTER THE DELIVERY OR SERVICES HAS BEEN COMPLETED YOU MUST SUBMIT THREE (3) COPIES OF AN INVOICE FOR PAYMENT TO THE RECEIVING DEPARTMENT LISTED ON THE PURCHASE ORDER.**
2. **THE INVOICE MUST CORRECTLY REFERENCE THE PURCHASE ORDER NUMBER, THE VENDOR NAME, ADDRESS AND FEDERAL EMPLOYER IDENTIFICATION NUMBER.**
3. **CHECKS WILL ONLY BE MADE PAYABLE TO THE COMPANY NAME AS SHOWN ON THE PURCHASE ORDER; THE INVOICE MUST REFLECT THIS SAME COMPANY NAME AS THE "PAY TO".**
4. **THE INVOICE MUST SHOW THE QUANTITY AND TYPE OF ITEM OR SERVICE AND THE PRICE.**
5. **THE UNIT OF PURCHASE ON THE INVOICE MUST AGREE WITH THE UNIT CITED ON THE PURCHASE ORDER. REFERENCE TO THE SPECIFIC LINE ITEM IS HELPFUL.**

Paying vendors is the responsibility of the *receiving* City Department(s), not the Procurement Department. Vendors should bring any problems concerning payments to the attention of the appropriate City receiving department. The name and number of the contact person can generally be found on the purchase order. If all necessary paperwork has been submitted to the department and questions still remain, vendors should contact:

City of Philadelphia
Accounting Verification
Room 1340 Municipal Services Building
1401 J.F.K. Blvd.
Philadelphia, PA 19102
Tel. 215 686 6365

VENDORS INTERESTED IN RECEIVING PAYMENTS ELECTRONICALLY MUST COMPLETE AN ACH VENDOR ENROLLMENT AND CHANGE FORM. THIS FORM CAN BE DOWNLOADED FROM WWW.PHILA.GOV/BIDS.

BIDDERS GUIDELINES*

The following list will assist you in the preparation of your bid.

- Read the entire bid so that you fully understand all the requirements.
- All bids must be submitted to the City no later than the time and date stated as the bid opening.
- Note the City Anti-Discrimination Policy. If Office of Economic Opportunity Participation is required be sure to fill out all appropriate forms. If you have questions call OEO at (215) 686-6232.
- Make sure you submit the appropriate Bid Security and Bid Submission Fee with your bid. Refer to Section 1 of the bid and the Conditions of Bidding sheet.
- Bidder must meet **all** qualifications.
- If an alternate to any item is being offered, you must follow the instructions in paragraph 2 of the Conditions of Bidding sheet.
- Does the bid require a site inspection, attendance at a Pre-Bid Meeting, samples, financial information or other data you must provide?
- Have you signed and returned all Addenda?
- If the bid is going to be awarded as a whole, you must bid on all items. See Section 3 of the bid: Bid Evaluation and Award.
- Bidders' attention is directed to the Conditions of Bidding sheet regarding the Master Performance Bond.
- Bids and pricing must be written in ink or typed. FAXed bids will not be accepted.
- **Do not** submit counter terms or conditions. **Your bid will be rejected**.
- Have you signed the Contract Page and affixed your Corporate Seal as required?
- **Do not** combine check amounts: All checks should be individual and specific.
- Please double check all mathematical calculations for errors.

If you have questions call Public Information at (215) 686-4720.

*This information is provided for guidance only and does not preclude your responsibility to read fully and respond to all portions of this bid.

CITY OF PHILADELPHIA
PROCUREMENT DEPARTMENT
Public Information Unit

ATTENTION VENDORS

If your company would like to receive the results of a particular bid, the Public Information Unit of the Procurement Department will forward this information to you at a **$10.00 fee, company check or money order only, no personal checks or cash,** for **each** bid number requested. Please be advised that bid tabulations **are not available** by telephone. If you have any questions, Please call 215-686-4755 or 215-686-4756.

BID RESULTS REQUEST FORM

Please complete form below. Only one (1) request per form.

Date of Request:_____

Bid Number Requested: _____ Opening Date: _____

Company Name: _____
Company Representative: _____
Address: _____
_____

Telephone No.: _____ Fax No.: _____

Mail this Request to the address below and enclose the following items:

- ☐ Company check or Money Order payable to **"City of Philadelphia"**
- ☐ A self-addressed stamped envelope which is at least 9 ½ " x 12 ½ " or larger for each Bid requested.

Failure to send either of the above items, will void your request.

Mail Request To:
The Procurement Department Public Information Unit
Attention: Bid Results
1401 JFK Blvd.
Room 170B
Philadelphia, PA 19102

COMPANY CHECK OR MONEY ORDER ONLY

Revised 09/08

C I T Y O F P H I L A D E L P H I A

Procurement Department
120 Municipal Services Building
Philadelphia, PA 19102-1685
(215) 686-4720
(215) 686-4716 Fax

Hugh Ortman
Procurement Commissioner

Master Bid Security Program for Service, Supplies and Equipment Bids
Period of Coverage: July 1, 2008 – June 30, 2010

(Bids for Professional Consulting Services, Public Works, Construction and Demolition [wrecking and building removal] *are not* covered under the Master Bid Security Program)

Dear Vendor:

The Philadelphia City Charter requires that each bid submission over $30,000 be accompanied by a certified check in the amount specified in the bid invitation. This requirement can be met for most bids if the Bidder is covered under the City's Master Bid Security Program. This program provides bid security coverage for Service, Supply and Equipment bids that have a total dollar value of over $30,000 up to $500,000.

To file for coverage under the Bid Security Program, for the period **July 1, 2008 to June 30, 2010**, complete the enclosed application and return it with a check for **$175.00.** Make the check payable to "**City of Philadelphia**". It is **non-refundable.** To clarify the precise use of the check, enter the words "**Bid Security Program**" **2008 – 2010** on the face of the check.

If you do not become a participant in the program at this time, you may still submit bids. However, they must be accompanied by a certified check in the amount specified in the Terms and Conditions of Bidding.

For additional information or inquiries regarding this program, please contact: The Public Information Unit at (215) 686-4719, (215) 686-4720 or (215) 686-4721.

IF A RECEIPT IS REQUESTED, PLEASE ENCLOSE A SELF-ADDRESSED STAMPED ENVELOPE.

Forward Check with Application to
CITY OF PHILADELPHIA
MASTER BID SECURITY PROGRAM
170A Municipal Services Building
Philadelphia, PA 19102-1685

Company Name: _____

Fed EIN/SSN: _____

Street Address _____

City, State, Zip: _____

Contact Person: _____

Telephone No: (___)_____Fax No: (___)_____

☐ A. Check payable to the City of Philadelphia in the amount of $175.00 for 7/1/08 to 6/30/10

DO NOT SEND CASH. NO PERSONAL CHECKS.

Internal Use Only

Rcvd. ___/___/___ Pymt. Type _____ Ck. Amt. $ _____ Ck.# _____

C I T Y O F P H I L A D E L P H I A

Office of the Director of Finance
Room 1330, Municipal Services Bldg.
1401 John F. Kennedy Boulevard
Philadelphia, Pa 19102-1685

Rob Dubow
Director of Finance

The City of Philadelphia is pleased to announce a **Vendor Information Payment System (VIPS)** which will allow businesses such as yours to inquire about the status of invoices billed against purchase orders and professional services contracts. The only requirement is that your invoices utilize a unique number – either alpha, numeric or a combination of the two.

This system will be operational twenty four hours a day, seven days a week. All you have to do is dial **215-686-5968**, and follow the prompts to get an up-to-date status on your payments.

Enclosed for your convenience is an easy to use reference guide which provides a brief overview of what you can expect. I urge you to give it a try and see for yourself how easy it is to use. If you should happen to experience any problems, or if you would like to comment on this system, please call the **Office of the Director of Finance** at **215-686-6167**.

I believe that you will find this way of obtaining payment information convenient and easy to use.

Vendor Information Payment Reference Guide

- 1- Call 215-686-5968.
- 2- After the prompts,enter the 8 numeric characters that uniquely identifies your purchase order.
- 3- Select one of the three inquiry options:
  - a) by your purchase order.
  - b) by your company.
  - c) by your specific invoice number.
    - (Numeric invoice numbers only)

TERMS AND CONDITIONS OF BIDDING AND CONTRACT

BID SUBMISSION

1. PREPARATION AND SUBMISSION OF BID.
All bids must be written in ink **or** typewritten and made on the forms issued and signed in ink by a person with legal authority to bind the bidder. The contract awarded hereunder shall consist of the Invitation and Bid, , all addenda thereto issued by the City, all exhibits and attachments issued and/or accepted by the City and these Terms and Conditions of Bidding and Contract (the "Contract"). It is the sole responsibility of the bidder to ensure that it has received any and all addenda and the Procurement Commissioner may in his/her sole discretion reject any bid for which all addenda have not been executed and returned in accordance with the instructions provided therein. No bid may be considered if received after the date and time for the opening of bids established by the Invitation and Bid, nor may any bid be modified after that date and time. The time of bid opening shall be the time displayed on the City's official bid clock located at the bid room. In the event of any discrepancy between actual time and the City's official bid clock, the latter shall determine the time of bid opening.

2. BID SECURITY. Unless the bidder is enrolled under the City's Annual Master Bid Security Program or an individual bid bond is required in the Invitation and Bid, all bids must be accompanied by a Certified Check, Treasurer's Check, Cashier's Check, Bank Money Order, or United States Postal Money Order made payable to the order of "The City of Philadelphia" in the proper amount as shown below:

AMOUNT OF BID OR ESTIMATED. CONTRACT	AMOUNT OF CERTIFIED CHECK
$ 30,000.00 or less	No Check Required
$ 30,000.01 - $ 99,999.99	$ 500.00
$100,000.00 - $249.999.99	$2,000.00
$250,000.00 - $499,999.99	$4,000.00
$500,000.00 or more	$6,000.00

When computing amount of Bid for Certified Check purposes, do NOT deduct for trade-ins.

Any bid in excess of $500,000 is not covered by the Annual Master Bid Security Program, and bidder must submit a certified check, treasurer's check, cashier's check, bank money order, or United States postal money order made payable to the order of "The City of Philadelphia" in the required amount.

Once the lowest responsive and responsible bidder has been determined all other bidders will receive a refund in the amount of the bid security submitted. Bid security submitted by the lowest responsive and responsible bidder will be refunded after receipt of all duly executed Contract documents, required fees, bonds or other performance security. Funds submitted for the Master Bid Security Program are not refundable.

3. BID PROCESSING FEE. In addition to bid security and any other fee or monies required to be submitted with the bid, the bid shall be accompanied by a non-refundable processing fee in the form of a separate standard check, bank money order or United States postal money order made payable to the order of "City of Philadelphia" in an amount based on the gross amount of the bid in accordance with the formula below. Cash is not acceptable.

AMOUNT OF BID OR ESTIMATED CONTRACT	AMOUNT OF PROCESSING FEE
$ 30,000.00 or less	No Check Required
$ 30,000.01 - $ 100,000.00	$ 10.00
$ 100,000.01 - $ 300,000.00	$ 30.00
$ 300,000.01 - $ 500,000.00	$ 50.00
$ 500,000.01 - $1,000,000.00	$100.00
$1,000,000.01 - $2,000,000.00	$200.00
$2,000,000.01 - $3,000,000.00	$300.00
$3,000,000.01 - $4,000,000.00	$400.00
$4,000,000.01 - $5,000,000.00	$500.00
$5,000,000.01 or more	$600.00

4. SPECIFICATIONS. When a formal, numbered, specification is referred to in the Invitation and Bid, no deviation therefrom will be permitted, except if/as indicated in the Invitation and Bid and the bidder will be required to furnish articles and/or services in conformity with that specification. When catalogues, model numbers, trade names, or cuts are listed in the Invitation and Bid, they are, unless otherwise specified, included for the purposes of furnishing bidders with information concerning the style, type or kind of article and /or service desired. A bidder may offer an article and/or service which he/she certifies to be equal or better in quality, performance and other essential characteristics. If submitting an alternate, the bidder must specify the alternate (e.g., make and model #) in the bid and submit with the bid a complete description of the article (including any technical literature) and/or service proposed to be furnished. Failure to do so will require the bidder to furnish the article and/or service specified in the Invitation and Bid. The Procurement Commissioner reserves the sole right to determine whether alternates offered are equal or better. Unless otherwise provided in the bid specifications, all items offered by the bidder must be new. A "new" item is one which will be used first by the City. This clause shall not be construed to prohibit bidders from offering goods, supplies, equipment, or materials containing recycled materials or printing with recycled content; bidders intending to provide goods made with recycled materials should notify the Procurement Department.

5. PATENTS. The successful bidder shall be solely responsible for all royalties and charges that may be due to any patent holder for or on account of the use of any patented appliance, product or processes. Evidence of such payment shall be submitted upon request of the Procurement Commissioner and failure to submit such evidence may, in the sole discretion of the Procurement Commissioner, result in rejection of the bid or constitute an event of default, entitling the City to all rights and remedies as provided herein in Section 16 and/or 18.

6. LOCAL BIDDING PREFERENCE
In accordance with Chapter 17-109 of the Philadelphia Code relating to Local Bidding Preferences for Procurement Contracts, this bid may be subject to a 5% local bid preference. In order to determine eligibility to receive the 5% preference, if applicable, bidder or subcontractor must be certified at the time of the bid opening and must submit with the bid, the Local Business Entity Certification Number* as issued by the Procurement Department for the prime contractor or the applicable subcontractor.

*Note: If you wish to apply for Local Business Entity (LBE) certification, go to www.phila.gov/bids. Please allow sufficient time prior to bidding for processing of the LBE application.

EVALUATION AND AWARD

7. TYPES OF BIDDER RESTRICTED. Bidders must not be a party to more than one bid for the same article or service. A violation of this condition may, in the sole discretion of the Procurement Commissioner, result in rejection of any or all such bids in which the bidder has an interest.

8. RESPONSIVENESS. Subject to the right of the Procurement Commissioner to waive nonresponsiveness as set forth below in this Section, these Terms and Conditions of Bidding and Contract and the specifications and requirements included in the Invitation and Bid are mandatory and must be strictly followed by all bidders in the preparation and submission of their bids. After bids are opened, the Procurement Department, and other City departments or agencies where appropriate or specified, shall review all bids for responsiveness to these Terms and Conditions of Bidding and Contract and the specifications and requirements included in the Invitation and Bid.

Any bid which is incomplete, obscure, conditional, or unbalanced, which contains additions not called for, or irregularities of any kind, including alterations or erasures, or which fails to conform in any respect to these Terms and Conditions of Bidding and Contract and the specifications and requirements included in the Invitation and Bid is nonresponsive and shall be rejected, except where the Procurement Commissioner, in his/her sole discretion, determines that the nonresponsivencss is not material to the Invitation and Bid or that a waiver of the nonresponsiveness is otherwise permitted by the Invitation and Bid, by these Terms and Conditions of Bidding and Contract or by law. The Procurement Department's determination of nonresponsiveness shall be final and any bid rejected as nonresponsive shall not be eligible for contract award.

9. RESPONSIBILITY. Unless otherwise specified, after bids are opened, the Procurement Department, and other City departments or agencies where appropriate or specified, shall review and may investigate the responsibility, including, but not limited to, the qualifications, references, capacity and ability to perform the Contract resulting from the Invitation and Bid in accordance with its terms, and integrity, of the lowest responsive bidder. All determinations of bidder responsibility shall be vested in the sole discretion of the Procurement Commissioner and other City officials. Any bidder who is deemed not responsible shall be ineligible for award of the Contract.

Bidders deemed not responsible will be notified of such determination and the reasons therefore in writing by the Procurement Department, and shall have the right to contest the determination by submitting to the Procurement Department, within forty-eight (48) hours after receipt of its written determination, a written request for reconsideration that includes information relating to the bidder's qualifications and responsibility and demonstrating the insufficiency of the reasons stated in the written determination finding the bidder not responsible. Any further determination of a contesting bidder's responsibility shall be vested in the sound discretion of the Procurement Commissioner and other City officials.

10. CANCELLATION AND AWARD. The Procurement Commissioner, in his/her sole discretion, may cancel any Invitation and Bid prior to bid opening. After bid opening, the Procurement Commissioner, in his/her sole discretion, may reject all bids, if deemed in the best interest of the City. In all cases where a Contract award is made by the Procurement Department, the bidder is bound by the terms and conditions of the Invitation and Bid upon the submission of its bid. All bids are valid for a period of not less than 60 days, or as otherwise specified in the Invitation and Bid. If the bid has not been awarded within the specified period of time, the bid shall be valid for subsequent award only upon the express consent of the bidder, with no change to the submitted bid. Any price increases/decreases expressly provided for in the Invitation and Bid will be allowed. All Contract awards shall be made by the Procurement Department upon written notice to the bidder that is determined by the Procurement Department to be the lowest responsive and responsible bidder.

11. QUANTITIES AWARDED. For requirements contracts only, the articles and quantities of such articles as set forth in the Invitation and Bid are estimates and the Procurement Commissioner, in his/her sole discretion, may make an award for all or some of the articles bid and in such quantities as the Procurement Commissioner shall deem appropriate. For firm limit contracts, it is the City's intent to award based upon the quantities set forth in the Invitation and Bid, but the City reserves the right to award more or less.

12. DELIVERY, PRICE INCREASES AND TIE BIDS. All articles must be delivered at the price(s) bid, FOB Destination. Bids containing reservations of the right to increase the price(s) bid, including, but not limited to, late payment charges, will not be considered, except where the Procurement Commissioner, in his/her sole discretion, finds it in the City's best interest to do so. In the event of an absolute tie, the award decision will be made in the best interests of the City as determined by the Procurement Commissioner.

CONTRACT EXECUTION AND CONFORMANCE

13. CONTRACTS. Awards of contracts in amounts less than or equal to $30,000 shall become contracts binding upon the City upon written notice of award by the Procurement Commissioner. Awards of contracts in amounts greater than $30,000 shall not become contracts binding upon the City until after written notice of award is made and until after all of the following conditions have been satisfied:

a. Successful bidder posts sufficient performance security, as required in the Invitation and Bid, within the time specified in the written notice of award;

b. Successful bidder posts a payment bond or other payment security, if and as required by the Invitation and Bid, within the time specified in the written notice of award;

c. Approval of the Contract as to form by the City's Law Department;

d. Certification by the Director of Finance and City Controller as to the availability of funds; and

e. Execution of the Contract by the Procurement Commissioner.

The Procurement Commissioner may, in his/her sole discretion, cancel any Contract award if any of the above conditions (a-e) are not satisfied, or if the Procurement Commissioner, in his/her sole discretion, determines cancellation to be in the best interests of the City. The bidder agrees that in the event of such cancellation, it shall not have any claim against the City, including any claim for breach of contract or of any other legal duty, or for lost profits, costs, damages, or expenses of any kind.

14. PERFORMANCE SECURITY. The City of Philadelphia requires performance security for contracts greater than $30,000. If the amount of the contract to be awarded is greater than $30,000 but less than or equal to $500,000, the successful bidder is required to participate in the City's Master Performance Security Program by paying to the City a non-refundable fee of $5.00 per thousand dollars of the contract amount for firm limit contracts and $4.00 per thousand dollars of the contract amount for requirements contracts, or as otherwise specified. If the amount of the contract to be awarded is in excess of $500,000 the successful bidder is required to furnish an individual performance bond, issued by a surety approved by the City on a form prepared by the City's Law Department and in the amount specified in the notice of contract award. The successful bidder is also required to pay a bond preparation fee to the City's Law Department in an amount prescribed by Chapter 17-700 of The Philadelphia Code; a schedule of such fees may be obtained from the Procurement Department's Public Information Office.

15. INSURANCE. Unless otherwise specified, the successful bidder (referred to in this Section as "Contractor") shall, at its sole cost and expense, procure and maintain in full force and effect, during the entire period of the Contract (including any applicable warranty and/or renewal periods), the minimum types of insurance specified below. All insurance shall be procured from reputable insurers authorized to do business in the Commonwealth of Pennsylvania and shall be acceptable to the City. All insurance required herein shall be written on an "occurrence" basis and not a "claims-made" basis. The City of Philadelphia, its officers, employees, and agents are to be named as additional insured on all policies required hereunder, except the Workers' Compensation and Employers' Liability. Also, an endorsement is required stating that the coverage afforded these parties as additional insured will be primary to any other coverage available to them. The City's coverage as an additional insured shall be primary coverage. The insurance shall provide for at least thirty (30) days prior written notice to be given to the City in the event coverage is materially changed, canceled or non-renewed. Certificates of insurance evidencing the required coverages shall be submitted to the City within fifteen (15) days of notice of contract award. The City reserves the right to require the Contractor to furnish certified copies of the original policies of all insurance required hereunder at any time upon fifteen (15) days prior written notice. The insurance requirements set forth herein are not intended and shall not be construed to modify, limit, or reduce the indemnifications made in this Contract by the Contractor to the City of to limit the Contractor's liability under this Contract to the limits of the policies of insurance required to be maintained by the Contractor hereunder.

(a) WORKERS COMPENSATION AND EMPLOYERS LIABILITY

(1) Workers' Compensation – Statutory limits

(2) Employers Liability - $100,000 Each Accident – Bodily Injury by Accident; $100,000 Each Employee – Bodily Injury by Disease; $500,000 Policy Limit – Bodily Injury by Disease

(3) Other states insurance including Pennsylvania

(b) GENERAL LIABILITY INSURANCE

(1) Limit of Liability: $1,000,000 per occurrence combined single limit for bodily injury (including death) and property damage liability.

(2) Coverage: Premises operation: Blanket Contractual liability; Personal Injury liability; Products and completed operations; Independent Contractors; Employees as additional insured; Cross liability; Broad form property damage (including loss of use) liability; Asbestos abatement liability coverage (Note: Required for asbestos abatement projects only).

(c) AUTOMOBILE LIABILITY

(1) Limit of Liability: $1,000,000 per occurrence combined single limit for bodily injury (including death) and property damage liability.

(2) Coverage: owned, non-owned and hired vehicles.

16. **INDEMNIFICATION**. All bidders shall indemnify, defend and hold harmless the City, its officers, employees and agents from and against any and all losses, costs (including, but not limited to, litigation and settlement costs and counsel fees), claims, suits, actions, damages, liabilities and expenses, occasioned wholly or in part by the bidder's act or omission or fault or negligence or the act or omission or fault or negligence of bidder's agents, subcontractors (including suppliers), employees or servants in connection with the Contract, including, but not limited to, those acts or omissions or faults or negligence in connection with loss of life, bodily injury, personal injury, damage to property, contamination or adverse effects on the environment, the bidder's default under the Contract, losses incurred by the City's Master Performance Security Program, failure to pay subcontractors and suppliers and any infringement or violation of any proprietary right (including, but not limited to, patent, copyright, trademark, service mark and trade secret). This obligation to indemnify, defend and hold harmless the City, its officers, employees and agents shall survive the termination of the Contract resulting from the Invitation and Bid.

17. FAILURE TO EXECUTE CONTRACT. Any bidder not lawfully released from its bid, who refuses to execute a contract in accordance with its bid or who fails, refuses or is unable to furnish any required payment security, performance security or insurance, as may be required by the Invitation and Bid and/or these Terms and Conditions of Bidding and Contract, shall be liable for the entire amount of its bid security, as liquidated damages to the City; or if bid security is furnished under the Annual Master Bid Security

Program, for 10% of the amount of its bid, as liquidated damages to the City; or where the damages are readily ascertainable by the City, for the actual loss, cost or damage incurred by the City as a result of its failure to execute the contract or to furnish such bonds, performance security or insurance.

18. **ASSIGNMENT**. The successful bidder shall not assign the Contract resulting from the Invitation and Bid, or any part of the Contract, or any right to any monies to be paid under the Contract, or delegate performance of the Contract, without obtaining the prior written consent of the Procurement Commissioner. The decision whether to consent to an assignment is within the Procurement Commissioner's sole discretion. In no case shall the Procurement Commissioner's consent to the assignment of any monies to be paid under the Contract relieve the bidder from faithful performance of any of its obligations under the Contract or change any of the terms and conditions of the Contract. Any purported assignment in violation of this provision shall be of no effect.

19. DEFAULT. All work performed and goods and services rendered by a successful bidder (referred to in this Section as "Contractor") under any Contract resulting from the Invitation and Bid shall strictly conform to these Terms and Conditions of Bidding and Contract and the specifications and requirements contained in the Invitation and Bid. The successful bidder shall comply with all applicable federal, state and local laws, statutes and ordinances and the regulations of all governmental departments, boards, agencies, and commissions. The following shall constitute events of default under any Contract resulting from the Invitation and Bid:

a. Failure by Contractor to comply with any provision or Section of the Contract, including the bid specifications contained in the Invitation and Bid and these Terms and Conditions of Bidding and Contract and/or failure by Contractor to comply with any federal, state and local law, statute, ordinance or regulation of any governmental department, board, agency and commission.

b. Falseness of any representation or warranty made in the Contract or other document(s) submitted to the City by Contractor in connection with the Invitation and Bid.

c. Failure by Contractor to pay its suppliers or subContractors, misappropriation of any funds provided under the Contract or failure to notify City upon discovery of any misappropriation.

d. A violation of law by Contractor which results in its making a guilty plea, a plea of nolo contendere, or conviction of a criminal offense by Contractor, its directors, employees, or agent or indictment or charges, in the sole judgment of the Procurement Commissioner, adversely affect the performance of the Contract.

e. Failure by Contractor to comply with the Mayoral Executive Order establishing the City's antidiscrimination policy relating to the participation of minority, woman and disabled owned disadvantaged business enterprises.

f. The Procurement Department's determination that the Contractor is not a responsible bidder on the Invitation and Bid, where such determination is made, and is based upon, information received after award of the Contract and/or after execution of the Contract by the Procurement Commissioner and/or after satisfaction of any or all other conditions of a binding Contract set forth in Section 2 above.

g. Any other act or omission identified in these Terms and Conditions of Bidding and Contract or elsewhere in the Invitation and Bid as an event or condition constituting default.

Upon the occurrence of an event of default, the Procurement Commissioner, in his/her sole discretion, may require Contractor to cure the default within a period of time to be determined by the Procurement Commissioner, or terminate the Contract in whole or in part and exercise any one or more of the following remedies (which remedies may be concurrent and shall be in addition to and not in lieu of the remedies available to the City at law, in equity, under any bond(s) filed in connection with the contract or under other sections of these Terms and Conditions of Bidding and Contract and Contract):

a. Purchase goods and/or services from others in substitution of goods or services that were not furnished or performed by Contractor or that were defective or otherwise in violation of any provision of the Contract; the cost of such substituted goods and services shall be the sole responsibility of Contractor and Contractor agrees to pay immediately, upon receipt of the City's invoice, the difference between the Contract price and the substituted product or service cost, plus any other loss, cost or damages incurred by the City.

b. Appropriate to the payment of the difference between the Contract price and the cost of such substitute goods or services, and the amount of any other loss, cost or damage incurred by the City as a result of the default, any monies which may then be due and payable to Contractor under this Contract or any other Contract that Contractor then has with the City.

The City shall notify Contractor in writing of such termination, which shall be effective as of the date specified in the notice of termination (the "Termination Date"). The Procurement Commissioner may, in his/her sole discretion, require Contractor to continue to furnish all goods and perform all services required under the Contract until the Termination Date, in which case, subject to the remedies enumerated above, the successful bidder shall be paid in accordance with the Contract therefore. If the City requires Contractor to cure the event(s) of default, or to continue to furnish goods or services until the Termination Date, and Contractor refuses or fails to do so, then such failure shall itself be deemed an event of default under this Section, for which the City may exercise any of its rights hereunder.

20. PAYMENT FOR EQUIPMENT. Unless otherwise provided in the bid specifications, when equipment involves installation, (which shall also be interpreted to mean erection and/or setting up or placing in position for service or use) and/or testing, and where such installation or testing is delayed though no fault of the contractor, contractor shall be entitled to a payment equal to 50% of the price bid when such equipment is delivered on site and to a further payment equal to an additional 25% of the price bid when the equipment is

installed and ready for test. The balance shall be paid only after the equipment is tested and found to be satisfactory by the City. If the equipment must be tested, but installation is not required to be made by the supplier or if the equipment must be installed but testing is not required, and the installation or testing is delayed through no fault of the contractor, contractor shall be entitled to a payment equal to 75% of the price bid at the time of delivery and the balance shall be paid after satisfactory testing and/or installation, as required.

TAX MATTERS

21. **TAX EXEMPTION**. The City of Philadelphia is exempt from the payment of any federal excise or transportation taxes and any Pennsylvania sales tax. The price bid must be net, exclusive of taxes. However, when under established trade practice any federal excise tax is included in list prices, bidder may quote the list price and shall show separately the amount of the federal tax, either as a flat sum or as a percentage of the list price, which shall be deducted by the City. In the event bidder pays any sales or use tax, bidder hereby assigns to City, or City's agent, all of its rights, title and interest in any sales or use tax which may be refunded as a result of the purchase of any articles furnished in connection with the Contract and bidder, unless directed by the City, shall not file a claim for any sales or use tax refund subject to this assignment. Bidder authorizes the City, in City's name or the name of bidder, to file a claim for refund of any sales or use tax subject to this assignment.

22. TAX INDEBTEDNESS. The City of Philadelphia does not wish to do business with tax delinquents or other businesses indebted to the City. In furtherance of this policy, the following certifications have been developed and shall form a part of any Contract resulting from the Invitation and Bid. The successful bidder or other entity Contracting with the City is referred to below as the "Contractor".

a. Contractor's Certification of Non-Indebtedness - Contractor hereby certifies and represents that Contractor and Contractor's parent company(ies) and subsidiary(ies) are not currently indebted to the City of Philadelphia (the "City") and will not at any time during the term of this Contract (including any extensions or renewals thereof) be indebted to the City, for or on account of any delinquent taxes (including, but not limited to, taxes collected by the City on behalf of the School District), liens, judgments, fees or other debts for which no written agreement or payment plan satisfactory to the City has been established. In addition to any other rights or remedies available to the City at law or in equity, Contractor acknowledges that any breach or failure to conform to this certification may, at the option of the City, result in the withholding of payments otherwise due to Contractor and, if such breach or failure is not resolved to the City's satisfaction within a reasonable time frame specified by the City in writing, may result in the offset of any such indebtedness against said payments and/or the termination of this Contract for default (in which case Contractor shall be liable for all costs, losses and other damages resulting from the termination).

b. Subcontractor's Certification of Non-Indebtedness - Contractor shall require all subcontractors performing work in connection with this Contract ("subcontractor" shall also include suppliers providing goods or materials) to be bound by the following provision, and Contractor shall cooperate fully with the City in exercising the rights and remedies described below or otherwise available at law or in equity:

"Subcontractor hereby certifies and represents that subcontractor and subcontractor's parent company(ies) and subsidiary(ies) are not currently indebted to the City of Philadelphia ("City"). and will not at any time during the term of Contractor's Contract with the City (the "Contract"), including any extensions or renewals thereof, be indebted to the City, for or on account of any delinquent taxes (including, but not limited to, taxes collected by the City on behalf of the School District of Philadelphia), liens, judgments, fees or other debts for which no written agreement or payment plan satisfactory to the City has been established. In addition to any other rights or remedies available at law or in equity, subcontractor acknowledges that any breach of or failure to conform to this certification may, at the option of the City, result in the withholding of payments otherwise due to subcontractor for services rendered in connection with the Contract and, if such breach or failure is not resolved to the City's satisfaction within a reasonable time frame specified by the City in writing, may result in the offset of any such indebtedness against said payments otherwise due to subcontractor and/or the termination of subcontractor for default (in which case subcontractor shall be liable for all costs, losses and other damages resulting from the termination)."

23. TAX REQUIREMENTS. Any person or entity who bids on and/or is awarded a contract by the City and/or School District of Philadelphia, is subject to Philadelphia's business tax ordinances and regulations. The City Solicitor has determined that anyone who is awarded a contract by the City and/or School District pursuant to a bid has entered into a contract within the City, and the subsequent delivery of goods into the City or performance of services within the City constitutes doing business in the City and subjects the successful bidder, including but not limited to, one or more of the following taxes:

a. Business Privilege Tax
b. Net Profits Tax
c. City Wage Tax

The successful bidder, if not already paying the aforesaid taxes, is required to apply to the Department of Revenue, 1401 John F. Kennedy Blvd., Public Service Concourse, Municipal Services Building, Philadelphia, PA 19102 for a tax identification number and to file appropriate business tax returns as provided by law. Questions should be directed to the Business and Earnings Tax Unit at (215) 686-6600.

GENERAL INFORMATION

24. COMPLIANCE WITH LAWS. All goods and services and all documents and other materials furnished under the Contract shall conform with all applicable federal, state and local laws, statutes and ordinances and the applicable rules, regulations, methods and procedures of all governmental boards, bureaus, offices, commissions and other agencies. Contractor shall maintain during the term of the Contract all licenses, and authorizations required by

any applicable federal, state or local law or regulation. Applicable law shall include, without limitation, the laws stated in paragraphs 25 through 29 herein.

25. NONDISCRIMINATION.

a. Any Contract awarded pursuant to the Invitation and Bid is entered into under the terms of the Philadelphia Home Rule Charter and in its performance, Contractor shall not discriminate nor permit discrimination against any person because of race, color, religion, national origin, or sex. Such discrimination shall constitute an event of default under this Contract entitling City to terminate this Contract forthwith. This right of termination shall be in addition to any other rights or remedies as provided herein in Section 19 or otherwise available to the City at law or in equity.

b. In accordance with Chapter 17-400 of The Philadelphia Code, Contractor agrees that its payment or reimbursement of membership fees or other expenses associated with participation by its employees in an exclusionary private organization, insofar as such participation confers an employment advantage or constitutes or results in discrimination with regard to hiring, tenure of employment. promotions, terms, privileges or conditions of employment, on the basis of race, color, sex, sexual orientation, gender identity, religion, national origin or ancestry, shall constitute an event of default under this Contract and shall entitle the City to all rights and remedies as provided herein in Section 19 or otherwise available to the City at law or in equity. Contractor agrees to include the immediately preceding sentence, with appropriate adjustments for the identity of the parties, in all subcontracts which are entered into pursuant to this Contract. Contractor further agrees to cooperate with the Commission on Human Relations of the City of Philadelphia in any manner which the said Commission deems reasonable and necessary for the Commission to carry out its responsibilities under Chapter 17-400 of The Philadelphia Code. Failure to so cooperate shall constitute an event of default under this Contract entitling the City to all rights and remedies as provided herein in Section 19 or otherwise available to the City at law or in equity.

26. ETHICS REQUIREMENTS. To preserve the integrity of City employees and maintain public confidence in the competitive bidding system, the City intends to vigorously enforce the various ethics laws as they relate to City employees in the bidding and execution of City contracts. Such laws are in three categories:

a. Gifts. Executive Order No. 02-04 prohibits City employees from soliciting or accepting anything of value from any person or entity seeking to initiate or maintain a business relationship with the City of Philadelphia, its departments, boards, commissions, and agencies. Bidder understands and agrees that if it offers anything of value to a City official or employee under circumstances where the receipt of such item would violate the provisions of this Executive Order shall be subject to sanctions with respect to future City Contracts. Such sanctions may range from disqualification from participation in a particular Contract to debarment, depending on the nature of the violation. All bidders, agents or intermediaries who are solicited for gifts or gratuities by City employees are urged to report these incidents to the Inspector General, Aramark Tower, Third Floor, 1101 Market Street, Philadelphia, PA 19107.

b. City Employee Interest in City Contracts. In accordance with Section 10-1112 of The Philadelphia Home Rule Charter, no bid shall be accepted from, or Contract awarded to, any City employee or official, or any firm in which a City employee or official has a direct or indirect financial interest. All bidders are required to disclose any current City employees or officials who are employees or officials of the bidder's firm, or who otherwise would have a financial interest in the Contract.

c. Conflict of Interest. Both the State Ethics Act and the City Ethics Code prohibit a public employee from using his/her public office or any confidential information gained thereby to obtain financial gain for himself/herself a member of his/her immediate family, or a business with which he/she or a member of his/her immediate family is associated. "Use of public office" is avoided by the employee or official publicly disclosing the conflict and disqualifying himself/herself from official action in the matter, as provided in The Philadelphia Code Section 20-608.

27. NORTHERN IRELAND. Section 17-104(2)(b) of The Philadelphia Code prohibits the City from accepting bids from companies that do business in Northern Ireland, unless that business has implemented the fair employment principles embodied in the MacBride Principles. In furtherance of this ordinance, bidder makes the following certification and representations:

a. In accordance with Section 17-104 of the Philadelphia Code, bidder by execution of its bid certifies and represents that (i) bidder (including any parent company, subsidiary, exclusive distributor, or company affiliated with Bidder) does not have, and will not have at any time during the term of any Contract resulting from this bid (including any extensions thereof), any investments, licenses, franchises, management agreements or operations in Northern Ireland, and (ii) no product to be provided to the City under any resulting Contract will originate in Northern Ireland. unless Bidder has implemented the fair employment principles embodied in the MacBride Principles.

b. In the performance of any Contract resulting from this bid, Bidder agrees that it will not utilize any suppliers or subcontractors at any tier (i) who have (or whose parent subsidiary, exclusive distributor of company affiliate have) any investments, licenses, franchises, management agreements or operations in Northern Ireland or (ii) who will provide products originating in Northern Ireland unless said supplier or subcontractor has implemented the fair employment principles embodied in the MacBride Principles. Bidder further agrees to include provisions with this subparagraph (b), with appropriate adjustments for the identity of the parties, in all subcontracts and supply agreements which are entered into in connection with the performance of any resulting Contract.

c. Bidder agrees to cooperate with the City's Director of Finance in any manner which the said Director deems reasonable and necessary to carry out the Director's responsibilities under Section 17-104 of The Philadelphia Code. Bidder expressly understands and agrees that any false certification or representation in

connection with this subparagraph (c) and/or any failure to comply with the provisions of this subparagraph (c) shall constitute a substantial breach of any Contract resulting from the Invitation and Bid entitling the City to all rights and remedies provided in this bid or otherwise available in law (including, but not limited to, Section 17-104 of the Philadelphia Code) or at equity. In addition, it is understood that false certification or representation is subject to prosecution under IS Pa.C.S. Section 4904.

28. BUSINESS, CORPORATE AND SLAVERY ERA INSURANCE DISCLOSURE. In accordance with Section 17-104 of The Philadelphia Code, the successful bidder, after award of the Contract, will complete an affidavit certifying and representing that the bidder (including any parent company, subsidiary, exclusive distributor or company affiliated with bidder) has searched any and all records of the bidder or any predecessor business entity regarding records of investments or profits from slavery or slaveholder insurance policies during the slavery era. The names of any slaves or slaveholders described in those records must be disclosed in the affidavit.

The bidder expressly understands and agrees that any false certification or representation in connection with this Paragraph and/or any failure to comply with the provisions of this Paragraph shall constitute a substantial breach of this Contract entitling the City to all rights and remedies provided in this Contract or otherwise available in law (including, but not limited to, Section 17-104 of The Philadelphia Code) or equity and the Contract will be deemed voidable. In addition, it is understood that false certification or representation is subject to prosecution under Title 18 Pa.C.S.A. Section 4904.

29. PHILADELPHIA 21st CENTURY MINIMUM WAGE STANDARD. If Contractor is an Employer, as defined at Philadelphia Code Section 17-1303, Contractor shall comply with the minimum compensation standards by providing its employees with an hourly wage, excluding benefits, at least 150 percent of the federal or state minimum wage, whichever is higher, as more fully set forth at Philadelphia Code Chapter 17-1300. The Contractor shall promptly provide to the City all documents and information verifying its compliance with the requirements of Section 17-1300. Furthermore, Contractor shall notify each affected employee what wages are required to be paid.

The Office of Labor Standards may grant a partial or total waiver of Section 17-1300 based on specific stipulated reasons elaborated in Section 17-1304 of the Philadelphia Code.

TERMS AND CONDITIONS OF BIDDING AND CONTRACT

SIGNING OF BIDS

This contract consists of the Invitation and Bid (including exhibits and attachments), any addenda thereto issued by the City and the foregoing Terms and Conditions of Bidding and Contract (collectively, the "contract") and contains all the terms, conditions and requirements agreed upon by the parties. The terms "contract" and "agreement," whether capitalized or uncapitalized, shall have the foregoing meaning wherever they are used in the invitation and Bid, addenda thereto, the Terms and Conditions of Bidding and Contract, and this page. No other contract or agreement, oral or otherwise, regarding the subject matter of the contract shall be deemed to exist or to bind any party hereto or to vary any of the terms contained in the contract.

This contract may not be changed, amended or renewed, in whole or in part, except by a written amendment signed by the parties. No waiver by the City of any breach or noncompliance by the undersigned with any provision of this contract shall relieve the undersigned of any of its obligations or representations made under this contract.

This contract and all disputes arising under this contract shall be governed, construed and decided in accordance with the laws of the Commonwealth of Pennsylvania. The parties agree that any lawsuit, action, claim or legal proceeding involving, directly or indirectly, any matter arising out of or related to this contract or the relationship created or evidenced thereby, shall be brought exclusively in the United States District Court for the Eastern District of Pennsylvania or the Court of Common Pleas of Philadelphia County. It is the express intent of the parties that jurisdiction over any lawsuit, action, claim, or legal proceeding shall lie exclusively in either of these two forums. The parties further agree not to raise any objection to any lawsuit, action, claim or legal proceeding which is brought in either of these two forums and the parties expressly consent to the jurisdiction and venue of these two forums. The parties further agree that service of original process in any such lawsuit, action, claim or legal proceeding may be duly affected by mailing a copy thereof, by certified mail, postage prepaid to the addresses specified in the Invitation and Bid and/or this page.

NOTE: ANY BID THAT IS NOT EXECUTED IN ACCORDANCE WITH THE INSTRUCTIONS PROVIDED BELOW OR THAT DOES NOT INCLUDE STREET ADDRESS, CITY, STATE AND PHONE NUMBER, MAY, IN THE SOLE DISCRETION OF THE PROCUREMENT COMMISSIONER, BE REJECTED.

SIGNING OF BIDS:
If bid is by an INDIVIDUAL or a PARTNERSHIP, or if the bid does not exceed $30,000, date and sign the bid here, with the original signatures, in ink.

This _____day of_____20

(Signature of Owner, Partner)	**(Type or Print Name and Title)**
(Business Name of Bidder)	
(Address, including Zip Code)	**(Telephone Number, including Area Code)**

If the bid is a CORPORATION, date and sign the bid here with original signatures, in ink, by (a) President or Vice President of the Corporation AND (b) Secretary, Assistant Secretary, Treasurer or Assistant Treasurer of the Corporation; and (c) affix the seal of the Corporation. If the form is not signed by the President or a Vice President and Secretary, Assistant Secretary, Treasurer or Assistant Treasurer, attach a duly certified corporate resolution authorizing the person signing in place of such officers to execute this bid for the corporation.

This_____day of_____20

CORPORATE SEAL

	(Corporate or Business Name of Bidder)
(Address, including Zip Code)	**(Telephone Number, including Area Code)**
(Signature of President or Vice President)	**(Signature of Secy., Asst. Secy., Treas. or Asst. Treas.)**
(Type or Print Name and Title)	**(Type or Print Name and Title)**

APPROVED AS TO FORM	**CONTRACT EXECUTION**
(Assistant City Solicitor)	**(Procurement Commissioner)**

C I T Y O F P H I L A D E L P H I A

PROCUREMENT DEPARTMENT
120 Municipal Services Building
Philadelphia, Pa 19102-1685

Hugh Ortman
Procurement Commissioner

Dear Valued Vendor,

The City of Philadelphia is pleased to announce a new online **Vendor Invoice Information (VII) Website** which will allow businesses such as yours to inquire about the status of invoices billed against purchase orders and professional services contracts. The only requirement is that your invoices utilize a unique number – alpha, numeric or a combination of the two.

This system will be operational twenty four hours a day, seven days a week. All you have to do is log on to the City of Philadelphia website: **www.phila.gov,** click on "Vendor Invoice Information" under the "Help Me" section of the home page, enter your Federal Employer Identification Number (FEIN) and a valid active purchase order. Then, agree to a waiver statement and follow the prompts to get an up-to-date status on your payments.

You are urged to give it a try and see for yourself how easy it is to use. If you should happen to experience any problems, or if you would like to comment on this new system, please e-mail us using the question and comment field provided on the site.

We believe that you will find this new way of obtaining payment information convenient and easy to use.