BID OPENING DATE AND TIME

On: September 22, 2008 AT: 10:30 A.M.

BID NO.	PAGE	INVITATION AND BID ADVERTISED	BIDDER MUST COMPLETE BELOW
T9Z55120	1 OF 69		BIDDER AGREES TO COMPLY WITH ALL CONDITIONS OF THIS BID. UNSIGNED BIDS WILL NOT BE ACCEPTED.

This Invitation to Bid with your quotations must be received prior to the above cited bid opening date and time.

DEPARTMENT	DIVISION
Various	Various

AWARDED

DATE

FOR THE PROCUREMENT COMMISSIONER

CITY OF PHILADELPHIA
PROCUREMENT DEPARTMENT
MUNICIPAL SERVICES BLDG.
1401 JFK BLVD, ROOM 170A
PHILADELPHIA, PA 19102-1685

NAME AND ADDRESS OF FIRM

Federal EIN/Social Security Number

BUYER D. Yonke
J. Washington

TITLE OF BID **SIGN MATERIALS AND FLEET MARKINGS**

GENERAL INFORMATION

This Invitation to Bid is issued under the Anti-Discrimination Policy described in the Mayor's Executive Order 02-05.

While there are no Participation Ranges projected for this Bid, bidders are prohibited from discriminating in their selection of subcontractors and are encouraged to solicit quotes from businesses on an equitable basis with other firms.

For informational purposes only, please describe any such commitments on a separate sheet and identify the subcontractor's name, MBEC Certification Number, and dollar amount/ percentage of work.

BID QUESTIONS

All questions concerning this Invitation to Bid, including specifications and conditions, must be presented prior to the bid opening date and time. Contact the Procurement Department, Public Information Center by calling **(215) 686-4721, 686-4720, or 686-4719** with questions.

BID SECURITY

When applicable, BIDDERS MUST SUBMIT BID SECURITY.

BID SIGNATURE

BIDDERS MUST SIGN PAGE 8 OF THE "TERMS AND CONDITIONS".

For City Use Only

BID SECURITY See Conditions of Bidding	MASTER BID SECURITY		CERTIFIED CHECK SUBMITTED WITH BID	
	☐ YES	☐ NO	AMOUNT	CHECK NUMBER

VOLUNTARY PARTICIPATION AND COMMITMENT FORM (BID)
Please list any MBEC Certified and SBA vendors that will participate in this bid, including the Primary Bidder.

Minority (MBE), Women (WBE), and Disabled (DSBE) Owned Business Enterprises[1]

Bid Number		**Name of Bidder**			
Primary Bidder	**MBE ❑**	**WBE ❑**	**DSBE ❑**	**N/A ❑**	**SBA ❑**
Federal Tax Identification #					
Amount Committed		**Type of Work or Materials**			
Dollar Amount	**$**				
Percent of Total Bid	**%**				
Sub Contractor	**MBE ❑**	**WBE ❑**	**DSBE ❑**		
Vendor Name					
Federal Tax Identification #					
Amount Committed		**Type of Work or Materials**			
Dollar Amount	**$**				
Percent of Total Bid	**%**				
Sub Contractor	**MBE ❑**	**WBE ❑**	**DS-DBE ❑**		
Vendor Name					
Federal Tax Identification #					
Amount Committed		**Type of Work or Materials**			
Dollar Amount	**$**				
Percent of Total Bid	**%**				
Sub Contractor	**MBE ❑**	**WBE ❑**	**DSBE ❑**		
Vendor Name					
Federal Tax Identification #					
Amount Committed		**Type of Work or Materials**			
Dollar Amount	**$**				
Percent of Total Bid	**%**				

REVISED 4-2007

1 MBE/WBE/DSBES listed above **MUST** be certified by the MBEC prior to Bid Opening Date.

SECTION 1: GENERAL BID SUBMISSION

1.1 **TITLE: SIGN MATERIALS AND FLEET MARKINGS**

1.2 **SCHEDULE NO: 51**

1.3 **CONTRACT TERM**: 12/01/2008 to 11/30/2009 ("Initial Term"), with an option to renew for up to three (3) additional one (1) year periods, ("the Renewal Term") exercisable, at the City's sole discretion, as of the expiration of the Initial Term or then current Renewal term. The City may, at its sole discretion, renew the contract for up to three (3) months at the beginning of each renewal period(s) (the "Additional Performance Period"), if a decision has been made not to renew the contract for an entire year.

1.3.1 The City shall exercise such sole option to renew the Contract Term by issuing a letter (the "Renewal Notice") notifying the Contractor that the Contract is renewed for the Renewal Term or Additional Performance Period (identified by commencement and termination dates) that is specified in the Renewal Notice. The Contract shall be deemed to be renewed for such Renewal Term or Additional Performance Period, and Contractor shall be obligated to perform all terms and conditions of the Contract throughout such Renewal Term or Additional Performance Period, as of the effective date indicated on the City's Renewal Notice, whether or not Contractor has agreed, verbally or in writing, to such renewal of the Contract term.

1.3.2 If an individual Performance Bond and/or Payment Bond is required under this Invitation and Bid, such bond(s) shall be and remain in full force and effect throughout the Initial Term, all Renewal Terms, any Additional Performance Period, and the period of any unexpired warranty provided or required under the Contract, without notice of Contract renewal by the City to the surety or the consent of the surety thereto. It is the sole responsibility of the Contractor to ensure that such bond(s) remain in full force and effect as provided in this Section, and failure to do so shall be an event of default pursuant to Section 19, Default, of the attached Terms and Conditions of Bidding and Contract.

If participation in the City's Master Performance Security Program is required under this Invitation and Bid, Contractor shall pay the required annual fee for such participation for each Renewal Term upon the issuance of the Renewal Notice.

1.4 **CONTRACT TYPE: REQUIREMENTS**

1.4.1 The following items are required in the operation of various City agencies as ordered. Exact quantities cannot now be determined but estimates thereof are listed herein. Quantities listed may be increased or decreased to meet the requirements of the City during the period of this contract. A minimum is not guaranteed. Purchase orders issued as a result of this bid will be for materials or services to be delivered generally on an as-needed basis. Successful bidders are cautioned not to deliver any materials or services without first being advised to do so by the ordering agency.

1.4.2 It is the intent of the Procurement Department to make an award for the period as stated above subject to the appropriation of funds in succeeding fiscal year/years by City Council. The City's fiscal year is from July 1st to June 30th inclusive.

Commodities or services on the bid to be ordered after the end of the fiscal year are subject to the issuance of purchase orders for the following fiscal years. The City is not liable for the award involving following fiscal years' funds until such orders are issued.

The successful bidder(s) obligation to deliver on such purchase orders shall not take effect until the orders are issued. To simplify the contract procedure, however, the successful vendor will be required to furnish a Performance Bond or Performance Security Fee to cover units awarded to him.

1.5 **METHODOLOGY OF ACQUISITION**: Purchase only.

1.6 **STATEMENT OF DIRECTION:**
It is the intent of the City of Philadelphia to make an award for Reflective Traffic Sign Faces for the various agencies as specified herein during the contract period.

1.7 **BID SECURITY**

1.7.1 Bid security shall be based upon **cumulative bid amount per Section 5.**

All bids submitted with a total greater than $30,000.00 must be accompanied by the proper Bid Security.

Bidders already enrolled in the City's Master Bid Security Program for July 1, 2008 to June 30, 2010 are not required to provide Bid Security if their bid total is $500,000.00 or less (per paragraph 2 of "Terms and Conditions of Bidding and Contract").

The Master Bid Security Program allows bidders to qualify for bid security for individual bids submitted during the covered bidding period provided the individual bid total is $500,000.00 or less.

1.7.2 **Bids Opening July 1, 2008 through June 30, 2010**
Bidders may qualify for the Master Bid Security Program described above for **July 1, 2008 – June 30, 2010** by submitting a check in the amount of **$175.00** made payable to the City of Philadelphia. The check should be submitted, under separate cover, to the Bid Unit Supervisor at least one day prior to the first bid that the bidder wants covered under the program and is *non-refundable.* Or if, and only if, the bidder chooses to submit the check for the Master Bid Security Program with their bid, the check **MUST** be in the form of a Certified, Treasurer's or Cashier's Check, Bank or United States Postal Money Order and is non-refundable.

1.7.3 If the bidder is not enrolled and does not intend to enroll; or if the total value of the bid submitted exceeds $500,000.00, the Master Bid Security Program is not applicable. Bidders instead MUST submit with their bid a refundable Certified, Treasurer's or Cashier's Check, Bank Money Order or United States Postal Money Order in the amount as specified in Paragraph 2 entitled "Bid Security," of the "Terms and Conditions of Bidding and Contract".

1.8 **BID INFORMATION**:

1.8.1 All information concerning this bid will be contained in this bid document as issued or amended.

1.8.2 Information provided verbally by any City official shall not be binding or relevant.

1.9 **BID SUBMISSION**:

1.9.1 Bid information must be submitted to the City of Philadelphia no later than the time and date for the bid opening.

1.9.2 Advertised sealed bids will be received and read publicly at 10:30 AM in Room #170A, 1st Floor, Municipal Services Building, 1401 JFK Boulevard.

1.9.3 Bid should be complete and include ALL information required as described in the various paragraphs of the bid specifications.

1.9.4 All pricing must be completed on the forms provided; be complete; and be in ink or typed.

1.9.5 The bid must be complete as to required bid signatures and corporate seal, and fully accept the terms and conditions contained in the bid.

1.9.6 **BID PROCESSING FEE:**
All bids submitted where the bid total is greater than $30,000 shall be accompanied by the proper Bid Processing Fee. The fee shall be in the form of a separate check or money order in accordance with Paragraph 3 of the "Terms and Conditions of Bidding and Contract."

1.9.7 When M-DBE, W-DBE or DS-DBE ranges are required on an Invitation and Bid, bidders are reminded that the submission of a blank "Minority Business Enterprise Council Solicitation and Commitment Form" will be deemed non-responsive and ineligible for an award. Bidders are reminded to read carefully and entirely the "Bidder's Guidelines relating to Executive Order 1-93".

OR

If no M-DBE, W-DBE or DS-DBE ranges are established for this Invitation and Bid, bidders are requested to complete the "Voluntary Participation and Commitment Form (Bid)" located after page 1 of the bid.

Completion of this form will not, in any way, impact the City's determination concerning bidder's responsiveness to the requirements of the bid and the award process. The information provided in the "Voluntary Participation and Commitment Form (Bid)" will be for the City's information.

1.9.8 **LBE Certification:**

In accordance with the City of Philadelphia's Regulations Relating to Local Bidding Preferences for Procurement Contracts, this bid may be subject to a 5% local bid preference. In order to determine eligibility to receive the 5% preference, if applicable, **bidder or subcontractor must be certified at the time of the bid opening and must submit with the bid the Local Business Entity Certification number** as issued by the Procurement Department for the prime contractor or the applicable subcontractor. If the prime relies upon its subcontractor's LBE status in order to be eligible for the preference, the name and certification number of the subcontractor **must** be submitted with the bid. **Failure to submit the prime's LBE certification number or the subcontractor's name and the LBE certification number with the bid will deem bidder ineligible for the 5% preference.**

Further, by submission of this bid, bidder makes the following certification in connection with the grant of any local bidding preference:

"I certify, that if awarded this contract on the basis of application of the LBE preference, my company or my subcontractor, throughout the entirety of this contract, will perform the majority of the work under this contract within the geographic limits of the City of Philadelphia, and I will, or cause my subcontractor to, maintain within the City a majority of the inventory or equipment that will be used on this contract or the amount of inventory that is customary for this industry."

Prime or subcontractor's LBE Certification Number_____

If applicable:
Subcontractor's Name_____

NOTE: **If you wish to apply for Local Business Entity (LBE) certification, go to www.phila.gov/bids. Please provide sufficient time prior to bidding for processing of the LBE application.**

1.9.9 **BID QUESTIONS OR PROBLEMS**

In preparing the bid response, should any bidder need clarification on the bid requirements, identify a discrepancy in the specifications, determine that a specified product has been discontinued or an alternate procedure is advised, etc.; then the bidder is STRONGLY encouraged to bring these issues to the attention of the Procurement Department's Public Information Unit prior to the bid opening by calling (215) 686-4720 or 4721, or by faxing (215) 686-4716. **Questions, whether phoned or faxed, should be received no later than seven (7) calendar days prior to the scheduled opening date of the bid. The City reserves the right to only respond to those questions submitted prior to the stated deadline.** If it is in the City's best interest to do so, the bid MAY be amended to reflect the proposed changes/modifications. **Exceptions taken DO NOT obligate the City to change the specifications. The City of Philadelphia, Procurement Department will notify all bidders in writing, by addendum duly issued, of any interpretations/changes made to specifications or instructions. The City will not accept responsibility for oral instructions, suggestions or changes by any City agency.**

Otherwise the successful bidder will have to provide the product or service exactly as defined in this bid, and in accordance with the directions in Section 2 and 5.

1.9.10 **CONTACT PERSON(S):**

PRE-AWARD:
Indicate below to whom in your firm questions concerning this Invitation and Bid should be directed:

Name:_____

Address:_____

City/State/ZC:_____

Telephone No.(_____)_____ Ext.:_____

Fax No.(_____)_____

E-mail address_____

State Company Web Site Address:_____

POST-AWARD:
Indicate below to whom in your firm questions concerning the Contract resulting from this Invitation and Bid should be directed:

Name:_____

Address:_____

City/State/ZC:_____

Telephone No.(_____)_____ Ext.:_____

Fax No.(_____)_____

E-mail address_____

1.9.11 **ALTERNATES SUBMITTED:**
If an alternate to any item is offered, bidder must follow instructions in Paragraph 4 of "Terms and Conditions of Bidding and Contract". State the brand name and the model number of each alternate offered. Detailed technical information on the alternate should accompany the bid.

Failure to state alternates will obligate bidder to provide material and/or service specified in the bid.

Any other product information submitted by bidder in connection with this bid is for purposes of product description, information and specification only. Bidder agrees that any additional terms or conditions contained therein, including, but not limited to, disclaimers or limitations of liability, do not become part of the bid.

1.9.12 **SOLE PRODUCT SECTION D: Product for Gerber System (only):**
Award shall be made on the items specified. Alternate offered for other than the items specified will not be considered. For this Section of the bid only, Paragraph 4 of the "Terms and Conditions of Bidding and Contract" does not apply.

1.10 **BIDDER QUALIFICATION:**

1.10.1 All bidders must be a bona fide manufacturer of, or dealer in, the article or service specified within the bid. To demonstrate this, bidders should submit the following reference information with their bid. References provided should be pertinent to the commodity or service requested in this Invitation and Bid; and demonstrate the bidder's ability to perform on a contract of this size and scope.

Please note that reference information in each section must be completed. Failure to submit this information may result in the bidder's disqualification.

SECTION 1:

Customer References other than an employee or department of the City of Philadelphia, (excluding suppliers or financial institutions).

	A.	B.	C
Firm Name:	_____	_____	_____
Address:	_____	_____	_____
Contact:	_____	_____	_____
Phone #:	_____	_____	_____
Type Work:	_____	_____	_____
Years dealing w/your firm:	_____	_____	_____

SECTION 2:

Previous purchase order(s)/contract(s) with the City; (State "None" if applicable)

P.O./Contract Number:	_____	_____	_____
Department:	_____	_____	_____
Contact Name:	_____	_____	_____
Phone #:	_____	_____	_____
Item(s):	_____	_____	_____

NOTE: Do not provide the name and phone number of a Procurement Department Buyer in this section. Contact name(s) and phone number(s) must be from a City ordering department.

SECTION 2: SPECIFICATIONS

General Specifications:

2.1 Successful bidder(s) shall be required to supply the City of Philadelphia's various agencies with reflective traffic sign faces, blanks, reflective/non-reflective sheeting, etc. as listed in Sections 2 and 5 of this Invitation and Bid.

2.2 **Inventory**:
Successful bidder(s) must maintain an adequate inventory to provide delivery as required. The City reserves the right to inspect bidder's facility, prior to an award being made to determine if bidder has appropriate inventory.

2.3 Delivery locations/instructions will appear on Purchase Orders resulting from this Invitation and Bid.

2.3.1 Bidder to complete Section 5, "Type of Transport"

Warranty

2.4 Vendor shall guarantee that all products listed in this Invitation and Bid shall perform to the specifications as required and intended and that materials shall be warranted against defects in workmanship and/or manufacturing.

2.5 In "Pricing", Section 5, bidders will submit pricing for each item listed.

Bidder shall submit a price for each item listed below. Prices shall be firm for the Initial Term of the Contract. If subsequent Renewal Terms are exercised by the City, the vendor may increase prices as per paragraph 4.3 "Price Increase or Decrease."

SECTION 3: BID EVALUATION AND AWARD

3.1 **EVALUATION:**

3.1.1 Bid will be evaluated by the Procurement Department.

3.1.2 Bids will be evaluated for responsiveness to the bid specifications and for responsibility of the bidders.

3.1.3 Bids which are determined to be non-responsive for reasons of:

(i) improper bid security
(ii) improper bid execution
(iii) incompleteness
(iv) offering counter terms and conditions
(v) improper or incomplete execution of MBEC documents (if applicable)

may be disqualified by the City without notice to the bidder. The decision of the City is final.

3.1.4 Bidders whose bids are determined to be non-responsible for reasons of bidder qualification shall be notified by the City of the reasons for the determination and may contest the finding of non-responsibility through the prescribed procedures described in paragraph 9 of "Terms and Conditions of Bidding and Contract".

3.2 **AWARD:**

3.2.1 This Invitation and Bid shall be awarded as a whole or by section as a whole to the lowest responsive and responsible bidder(s). Bidders must bid all items in a section to be eligible for award in that section.

3.2.2 **LBE Calculation:**

If the 5 % local bid preference is applicable, the total bid price or total section price of the certified Local Business Entity (LBE) will be multiplied by .95 and rounded to the second decimal place. The adjusted bid price of the LBE will then be used in determining the lowest responsive and responsible bidder. If any section of the bid is awarded by line item, the 5% local bid preference will not apply to that section.

Unless the Procurement Commissioner determines not to grant a preference for the reasons stated in subsection b., of the LBE Regulation, an LBE, whose bid is otherwise responsive and responsible and who has submitted the information required above, shall be granted a five percent bid preference on competitive bid(s) awards that are over $30,000.00 and awarded as a whole or by section.

3.2.3 **PERFORMANCE SECURITY:**

Bidder's attention is directed to paragraph 14 of "Terms and Conditions of Bidding and Contract," for the required Performance Security.

Please note however, that all awards as a result of this bid will have a minimum contract amount of $30,000.01. All awards at the $30,000.01 amount will be subject to a $50.00 Master Performance Security Fee.

Performance security shall be required for any subsequent renewal

3.2.4 **City of Philadelphia-Business, Corporate and Slavery Era Insurance Disclosure**

In accordance with Section 17-104 of The Philadelphia Code, the Bidder, after execution of this Contract, will complete an affidavit certifying and representing that the Bidder (including any parent company, subsidiary, exclusive distributor or company affiliated with Bidder) has searched any and all records of the Bidder or any predecessor business entity regarding records of investments or profits from slavery or slaveholder insurance policies during the slavery era. The names of any slaves or slaveholders described in those records must be disclosed in the affidavit.

The Bidder expressly understands and agrees that any false certification or representation in connection with this Paragraph and/or any failure to comply with the provisions of this Paragraph shall constitute a substantial breach of this Contract entitling the City to all rights and remedies provided in this Contract or otherwise available in law (including, but not limited to, Section 17-104 of the Philadelphia Code) or equity and the contract will be deemed voidable. In addition, it is understood that false certification or representation is subject to prosecution under Title 18 Pa.C.S.A. Section 4904.

3.2.5 **INSURANCE:**
Insurance is a requirement for this bid in accordance with Paragraph 15 of the "Terms and Conditions of Bidding and Contract". No contract will be executed nor purchase order issued unless and until all required insurance certificates, in the required amount, are received. **All insurance MUST meet the following requirements:**

- Insured must be in the same name and address as the Bidder
- The insurance carrier must be rated "A" or better by AM Best
- The certificate holder must be the City of Philadelphia, and specifically named as an additional insured on the certificate in the "Description of Operations section".
- Certificate must be signed by an authorized representative of the insurance company/carrier

All certificates are to be sent to the Office of Risk Management, One Parkway, 1515 Arch Street, 14th Floor, Philadelphia, PA 19102, Attn. Debbie Lawton or FAX to (215) 683-1705.

SECTION 4: CONTRACT MANAGEMENT

4.1 CITY OF PHILADELPHIA RESPONSIBILITY:

City agencies will be notified by Procurement of award(s) and will be provided with vendor(s), vendor contact(s) and applicable pricing. Departments will prepare and submit through the appropriate review channels, a requisition detailing their specific needs and requirements to Procurement. The Procurement Department shall then apply the requisition against the contract and issue a purchase order.

Order Against Contracts
Subsequent to contract conformance of a Requirements bid, purchase orders will be issued at such time that the product and/or service is needed. Such purchase orders will show if delivery is to be made upon receipt of order, or only after notification by the using department.

4.1.2 Invoices shall be submitted after delivery and acceptance of the product or service by the City. The City attempts to process invoices in a timely manner. Delays can occur because of incomplete or inaccurate invoicing information. Please make sure that invoices contain the following information to help the City process payments to the Contractor as quickly as possible.

(a) After the delivery or services have been completed the Contractor must submit three (3) copies of the invoice for payment to the receiving department listed on the purchase order.

(b) The invoice must correctly reference the purchase order number, the vendor name, address and Federal Employer Identification number.

(c) Checks will only be made payable to the company name as shown on the purchase order; the invoice must reflect this same company name as the "pay to".

(d) The invoice must show the quantity and type of item or service and the price.

(e) The unit of purchase on the invoice must agree with the unit cited on the purchase order. Reference to the specific line item is helpful.

4.1.3 The using agencies and departments are responsible for monitoring the services and/or products delivered as described in the contract. If any problems arise, a letter should be sent to the vendor requesting resolution by a specified date. A copy should be sent to the buyer. If vendor does not resolve the breach of contract by the requested date the matter should be turned over to the buyer.

4.1.4 **ADD-ONS:**
The City reserves the right to add, delete and/or acquire other product/services that the vendor can supply that are similar to, but not specifically called for in this bid. The procedure for such acquisitions shall be as follows:

Procurement or the using department will obtain from the Vendor a letter (on his/her letterhead) verifying the items to be added. The letter shall include the complete description of the item, the location (if applicable), the bid number, bid schedule number, the price to the City and the applicable contract period; and upon receipt and approval by the Procurement Department shall automatically become part of the contract.

4.2 **VENDOR RESPONSIBILITY:**

4.2.1 Contractor may deliver only products, services or equipment (as applicable) as authorized in the contract and only after receipt of a purchase order or other authorized document from the Procurement Department. All orders must be in writing. Contractor shall not accept verbal delivery requests until after receipt of purchase order or other authorizing document from Procurement.

4.2.2 Contractor may deliver only products, services or equipment (as applicable) at the prices quoted in the contract and that are reflected on a purchase order or a change to a purchase order (a change to a purchase order is issued whenever the items, unit price, total amount, or terms and conditions change from the original purchase order).

4.2.3 Contractors may deliver products, services or equipment (as applicable) up to the dollar limit of the purchase order and for the period shown on the purchase order. Contractors are requested to carefully monitor obligations against purchase orders and inform the departments of anticipated funding shortfalls.

4.2.4 **DELIVERY:**
Unless otherwise specified in Section 2, noted by bidder in Section 5, and/or approved by the Using Agency, delivery of product and/or service will be made within 30 days from date requested by Using Agency. VENDOR NOTE: In Section 5, specify delivery if other than 30 days.

4.2.4.1 **Liquidated Damages:**
Liquidated Damages in the amount of 5% of the unit price may be applied to each item which exceeds the delivery schedule/requirement.

4.2.5 In the event that the contractor receives an order for products, services or equipment not specifically priced and incorporated into the contract, they must:

(i) bring this to the immediate attention of the Procurement Dept., and
(ii) notify the ordering agency in writing and refuse to deliver.

4.2.6 Should products, services, or equipment be delivered that are not specifically incorporated and priced into the contract, and/or be delivered without purchase order, the City shall have no obligation for payment.

4.2.7 For delivery of products or equipment, contractors shall honor and be paid for orders placed until the close of business of the date of purchase order expiration. Delivery of product may occur following purchase order expiration, so long as the order was placed prior to the purchase order expiration date.

4.2.8 For performance of services, contractor shall honor and be paid for orders placed until the close of business of the date of purchase order expiration. Performance of services may occur following purchase order expiration, so long as the order was placed prior to the purchase order expiration date.

4.2.9 **REPORTS**

4.2.9.1 **RECYCLED USAGE REPORTS**

If the successful bidder is supplying products/ services in this contract that have recycled content, indicate which item(s) contain this content in Section 5: Pricing, (under the applicable item) and the percentage of recovered material and post consumer material as it applies.

The successful bidder will be required, on a quarterly basis, to furnish a usage report of the recycled products purchased by City Departments. Two reports will be required:

a. **Departmental Report**

A report by purchase order, current and cumulative, showing item(s) delivered, description, date, quantity, price, extended amount and to the extent possible, the percent of recovered material in delivered items.

b. **Item Report**

A report, current and cumulative, by item, showing description, date, quantity, price, extended amount, and to the extent possible, the percent of recovered material and percent of Post-Consumer material in delivered items.

All reports are to be submitted to the Recycling Office, Room 780, Municipal Services Building, Philadelphia, PA 19102, Attn: Recycled Content Administrator.

In support of the City of Philadelphia's Recycling Program, bidders are encouraged to supply with their bid, any information available regarding recycled material content in the products bid. The City is particularly interested in the type of recycled material used (such as paper, plastic, glass, metal, etc.); the percentage of recycled material contained in the product and the cost and product performance impact of increasing the percentage of recycled content.

The City also requests information regarding any known or potential material content in the product that may be extracted and recycled after the product has served its intended purpose.

Product bid contains recycled content? YES ☐ NO ☐

Is your product packaged and/or shipped in material containing recycled content? YES ☐ NO ☐

Is your product recyclable after it has reached its intended end use? YES ☐ NO ☐

Is your product shipped in returnable Containers? YES ☐ NO ☐

4.2.10 **Approval of Work:**
All completed work shall be approved by the ordering department prior to approval for payment. Work must be completed in a first-class workmanlike manner to the absolute satisfaction of the City. The cost of any faulty or inadequate workmanship or parts will not be paid for by the department and must be assumed by the Contractor. In addition, the Contractor is responsible for picking up any delivered material that is rejected for non-compliance to specifications. Any and all costs associated with the return is to be at the sole expense of the Contractor.

4.2.11 **Invoices/Receipts:**

4.2.11.1 Successful bidder(s) agrees not to invoice more than once per month.

4.2.11.2 All invoices/receipts for parts shall have the signature and payroll ID number of the authorized/designated City personnel.

4.2.11.3 Invoices should be sent in triplicate to each ordering department.

4.2.11.3.1 One (1) original and two (2) copies fully itemized invoices.

4.2.11.3.2 See also item 4.1.2 above.

4.3 **PRICE INCREASE OR DECREASE:**
Prices herein are subject to increase or decrease in the event of any price changes in the general or published price established by the Manufacturer. Notice of all such changes shall be given in writing to the Procurement Department, Department of Finance and the Controller. This notice must be accompanied by the notice from the Manufacturer to the vendor showing the price changes. The new price will be determined by adding or deducting from the quoted price an amount which is in the same proportion to general or published price in effect on the date of bid opening. City reserves the right to review the propriety of the price rise and cancel the contract at its discretion.

Vendor must give 60 days notice of price increase, in writing, to the City. Notice shall be sent to the Buyer, Room 120 Municipal Services Building, 1401 JFK Blvd., Phila., PA 19102, referencing the Bid #, Contract # and period of contract.

Failure to notify the City within this sixty (60) day time frame shall result in the following:

the effective date of the price increase shall be sixty (60) days from the receipt of the price increase letter by the City.

NOTE: Price decreases may be forwarded to the Procurement Department buyer, in writing at any time during the contract period, to include any renewal period(s).

4.4 Failure to notify the City within the time frame specified in 4.3 will result in a commensurate delay in implementing the price change.

SECTION 5: PRICING
Prices quoted must not contain more than three (3) decimal places.

Bidder shall state Brand & Model Number. Technical literature to be submitted with bid.

All Faces and Signs MUST have Protective Overlay Film.

NOTE: Divided into three (4) Sections; MUST bid all items in a section-each section will be awarded as a whole.

SECTION A: FLEET MARKINGS:
SECTION B: ROLLED SIGN SHEETING
SECTION C: SIGN MATERIALS:
SECTION D: MATERIALS FOR GERBER SYSTEM

VENDOR NOTE: Prices to be quoted are for UNIT PRICES ONLY - NOT a lot cost for the entire quantity listed for that item.

Vendors shall quote prices on rolls (RL) and each (EA) as listed in each item.

		Quantity	Unit of Measure	Unit Price	Total Amount
SECTION A: FLEET MARKINGS:					
5.1	Sheeting, reflective prismatic lens, with pressure sensitive adhesive; diamond grade conspiculty; for trucks and trailer markings; 3M Scotchlite 980 Series for reference.				
5.1.1	**30586 000 080** Orange/White, Blue/White, 2" x 50 yds.	10	RL	$_____	$_____
	STATE BRAND_____				
	STATE MODEL NUMBER_____				

		Quantity	Unit of Measure	Unit Price	Total Amount
5.1.2	**30586 000 081** White, Red/White, 2" x 50 yds.	40	RL	$_____	$_____

STATE BRAND_____

STATE MODEL NUMBER_____

EXTENDED TOTAL BID AMOUNT FOR SECTION A ONLY (UNIT PRICE X QUANTITY FOR ALL ITEMS BID IN SECTION A). **$**_____

SECTION B: ROLLED SIGN SHEETING

REFLECTIVE SHEETING:

5.2 Fluorescent Yellow Green Microscopic Retroreflective Sheeting - Embossed "cube corner" microprisms which provide very high retroreflective properties. This specification applies to those sheeting materials intended for use on permanent traffic control signs where enhanced daytime visibility is essential such as school-zone crossings, railroad crossings or other caution signage applications, Pressure-sensitive, ASTM D,4596 Type 9. Must meet PennDOT specification and have PennDOT approval. Reference: 3M #3983 or equal.

5.2.1	**30586 000 058** Fluorescent Yellow Green 30" x 50 yards	5	RL	$_____	$_____

STATE BRAND_____

STATE MODEL NUMBER_____

		Quantity	Unit of Measure	Unit Price	Total Amount
5.2.2	**30586 000 059** Fluorescent Yellow Green 36" x 50 yards	5	RL	$_____	$____

STATE BRAND_____

STATE MODEL NUMBER_____

5.3 Sheeting, Reflective, pressure sensitive, adhesive materials shall meet PennDot specification and latest MUTCD Standards for Class IV reflective sheeting materials: 3M High Intensity Prismatic (H.I.P) #3930, #3931 series for reference. Colors: White, Yellow, Red, Blue, Green, Brown.
Colors to be specified at the time the orders are placed.

5.3.1	**30586 000 240** 12" x 50 YDS	10	RL	$_____	$____

STATE BRAND_____

STATE MODEL NUMBER_____

5.3.2	**30586 000 241** 18" x 50 YDS	10	RL	$_____	$____

STATE BRAND_____

STATE MODEL NUMBER_____

5.3.3	**30586 000 242** 24" x 50 YDS	10	RL	$_____	$____

STATE BRAND_____

STATE MODEL NUMBER_____

		Quantity	Unit of Measure	Unit Price	Total Amount
5.3.4	**30586 000 243** 30" x 50 YDS	10	RL	$_____	$_____
	STATE BRAND_____				
	STATE MODEL NUMBER_____				
5.3.5	**30586 000 244** 36" x 50 YDS	10	RL	$_____	$_____
	STATE BRAND_____				
	STATE MODEL NUMBER_____				
5.3.6	**30586 000 245** 48" x 50 YDS	10	RL	$_____	$_____
	STATE BRAND_____				
	STATE MODEL NUMBER_____				

VINYL SHEETING

5.4 Sheeting, vinyl, 30" X 50 YDS
Friction feed. American Traffic Safety
Material #NV23050BLK, WHT, GRN
RED, BL, GOLD.

5.4.1	**30586 000 155** Black.	5	RL	$_____	$_____
	STATE BRAND_____				
	STATE MODEL NUMBER_____				

		Quantity	Unit of Measure	Unit Price	Total Amount
5.4.2	**30586 000 156** White.	5	RL	$_____	$_____
	STATE BRAND_____				
	STATE MODEL NUMBER_____				
5.4.3	**30586 000 157** Green.	5	RL	$_____	$_____
	STATE BRAND_____				
	STATE MODEL NUMBER_____				
5.4.4	**30586 000 158** Red.	5	RL	$_____	$____
	STATE BRAND_____				
	STATE MODEL NUMBER_____				
5.4.5	**30586 000 159** Dark blue.	5	RL	$_____	$____
	STATE BRAND_____				
	STATE MODEL NUMBER_____				
5.4.6	**30586 000 165** Gold.	5	RL	$_____	$____
	STATE BRAND_____				
	STATE MODEL NUMBER_____				

		Quantity	Unit of Measure	Unit Price	Total Amount
5.5	Sign, vinyl non-reflective, 2 MIL, American Traffic Safety Material for refer.				
5.5.1	**30586 000 515** BRIGHT YELLOW	5	RL	$_____	$_____
	STATE BRAND_____				
	STATE MODEL NUMBER_____				
5.5.2	**30586 000 515 00** BRIGHT ORANGE	5	RL	$_____	$_____
	STATE BRAND_____				
	STATE MODEL NUMBER_____				
5.5.3	**30586 000 515 01** SAPPHIRE BLUE	2	RL	$_____	$_____
	STATE BRAND_____				
	STATE MODEL NUMBER_____				
5.5.4	**30586 000 515 02** OLYMPIC BLUE	2	RL	$_____	$_____
	STATE BRAND_____				
	STATE MODEL NUMBER_____				
5.5.5	**30586-000-515-03** PURPLE	2	RL	$_____	$_____
	STATE BRAND_____				
	STATE MODEL NUMBER_____				

		Quantity	Unit of Measure	Unit Price	Total Amount
5.5.6	**30586-000-515-04** BURGUNDY	2	RL	$_____	$____
	STATE BRAND_____				
	STATE MODEL NUMBER_____				
5.5.7	**30586-000-515-05** SILVER	2	RL	$_____	$_____
	STATE BRAND_____				
	STATE MODEL NUMBER_____				
5.6	Sheeting, vinyl, 2 mil friction feed for use in sign graphics machine. 3M #7725 series for reference.				
5.6.1	**30586-000-246** 24" x 50 YDS. Colors: green, red, dark blue, gold	5	RL	$_____	$_____
	STATE BRAND_____				
	STATE MODEL NUMBER_____				
5.6.2	**30586-000-249** 24" x 50 YDS. Colors: black & white	5	RL	$_____	$_____
	STATE BRAND_____				
	STATE MODEL NUMBER_____				

		Quantity	Unit of Measure	Unit Price	Total Amount
5.6.3	**30586-000-247** 36 x 50 YDS Colors: green, red, dark blue, gold **STATE BRAND**_____ **STATE MODEL NUMBER**_____	5	RL	$_____	$____
5.6.4	**30586-000-250** 36 x 50 YDS Colors: black & white **STATE BRAND**_____ **STATE MODEL NUMBER**_____	5	RL	$_____	$____
5.6.5	**30586-000-248** 42" x 50 YDS Colors: green, red, dark blue, gold **STATE BRAND**_____ **STATE MODEL NUMBER**_____	5	RL	$_____	$____
5.6.6	**30586-000-251** 42" x 50 YDS Colors: black & white **STATE BRAND**_____ **STATE MODEL NUMBER**_____	5	RL	$_____	$____

		Quantity	Unit of Measure	Unit Price	Total Amount

Transparent Screen Process Color

5.7 Durable, colorfast, rapid dry, transparent screen Processing colors for use in the production of Traffic control signs using 3M High Intensity Prismatic Grade and Diamond Reflective Sheeting as a base. Reference: 3M Series 880I/880N Inks. Used in conjunction w/reflective sheeting #3930 & 3931.

Note: Series "N" inks reduce post-screen, "ink triggered" cracking.

5.7.1	**30586 000 192** Yellow. 884N	5	GA	$_____	$____
	STATE BRAND_____				
	STATE MODEL NUMBER_____				
5.7.2	**30586 000 255** Red. 882N	10	GA	$_____	$____
	STATE BRAND_____				
	STATE MODEL NUMBER_____				
5.7.3	**30586 000 256** Blue. 883N	5	GA	$_____	$____
	STATE BRAND_____				
	STATE MODEL NUMBER_____				

		Quantity	Unit of Measure	Unit Price	Total Amount
5.7.4	**30586 000 257** Black (opaque). 885N	5	GA	$_____	$_____
	STATE BRAND_____				
	STATE MODEL NUMBER_____				
5.7.5	**30586 000 258** Orange. #886N	2	GA	$_____	$_____
	STATE BRAND_____				
	STATE MODEL NUMBER_____				
5.7.6	**30586 000 259** Brown. #887N	2	GA	$_____	$_____
	STATE BRAND_____				
	STATE MODEL NUMBER_____				
5.7.7	**30586 000 260** Green. #888N	3	GA	$_____	$_____
	STATE BRAND_____				
	STATE MODEL NUMBER_____				

		Quantity	Unit of Measure	Unit Price	Total Amount
5.8	**30586 000 193** Thinner. 3M #891. Used in conjunction w/reflective sheeting #3930 & 3931. **STATE BRAND**_____ **STATE MODEL NUMBER**_____	10	GA	$_____	$_____
5.9	**30586 000 280** Toner. 3M 8801. Used in conjunction w/reflective sheeting **STATE BRAND**_____ **STATE MODEL NUMBER**_____	5	EA	$_____	$_____
5.10	**30586 000 281** Flow Additive Used in conjunction w/reflective sheeting **STATE BRAND**_____ **STATE MODEL NUMBER**_____	5	EA	$_____	$_____

		Quantity	Unit of Measure	Unit Price	Total Amount
5.11	TRANSFER TAPE, PLASTIC OR NYLON BASED, FOR USE IN APPLICATION OF PREPOSITIONED LEGEND OR COPY TO SIGNAGE, VEHICLES, ETC.; 3M #TPM-5.				
5.11.1	**30586-000-500** 12" X 100 YARDS	5	RL	$_____	$___
	STATE BRAND_____				
	STATE MODEL NUMBER_____				
5.11.2	**30586 000 183** 18" X 100 YDS.	5	RL	$_____	$___
	STATE BRAND_____				
	STATE MODEL NUMBER_____				
5.11.3	**30586 000 265** 24" x 100 YDS	5	RL	$_____	$___
	STATE BRAND_____				
	STATE MODEL NUMBER_____				
5.11.4	**30586 000 266** 30" x 100 YDS	5	RL	$_____	$___
	STATE BRAND_____				
	STATE MODEL NUMBER_____				

		Quantity	Unit of Measure	Unit Price	Total Amount
	5.11.5 **30586 000 267** 36" x 100 yds.	5	RL	$_____	$___
	STATE BRAND_____				
	STATE MODEL NUMBER_____				
5.12	**30586 000 511** Holder, Tape, 24" single shaft. Webermade #WM24 for ref	2	EA	$_____	$_____
	STATE BRAND_____				
	STATE MODEL NUMBER_____				
5.13	FILM, #1177/1175/1172 for ref.				
	5.13.1 Green EC				
	5.13.1.1 **30586 000 195** 18" X 50	10	RL	$_____	$_____
	STATE BRAND_____				
	STATE MODEL NUMBER_____				
	5.13.1.2 **30586 000 196** 24" X 50	10	RL	$_____	$_____
	STATE BRAND_____				
	STATE MODEL NUMBER_____				

			Quantity	Unit of Measure	Unit Price	Total Amount
	5.13.1.3	**30586 000 075** 36" X 50" YDS	10	RL	$_____	$_____
		STATE BRAND_____				
		STATE MODEL NUMBER_____				
5.13.2	RED EC					
	5.13.2.1	**30586 000 271** 18" X 50 YDS	5	RL	$_____	$_____
		STATE BRAND_____				
		STATE MODEL NUMBER_____				
	5.13.2.2	**30586 000 273** 24" X 50 YDS	5	RL	$_____	$_____
		STATE BRAND_____				
		STATE MODEL NUMBER_____				
	5.13.2.3	**30586 000 274** 36" X 50 YDS	5	RL	$_____	$_____
		STATE BRAND_____				
		STATE MODEL NUMBER_____				

		Quantity	Unit of Measure	Unit Price	Total Amount
5.13.3 Blue EC					
5.13.3.1	**30586 000 270** 18" X 50 YDS	5	RL	$_____	$_____
	STATE BRAND_____				
	STATE MODEL NUMBER_____				
5.13.3.2	**30586 000 272** 24" X 50 YDS	5	RL	$_____	$_____
	STATE BRAND_____				
	STATE MODEL NUMBER_____				
5.13.3.3	**30586 000 076** 36" X 50" YDS	5	RL	$_____	$_____
	STATE BRAND_____				
	STATE MODEL NUMBER_____				
5.14	**30586 000 275** 60" x 50 YDS – ASTM; all colors (green, red, blue, yellow, orange, brown)	5	RL	$_____	$____
	STATE BRAND_____				
	STATE MODEL NUMBER_____				

EXTENDED TOTAL BID AMOUNT FOR SECTION B ONLY (UNIT PRICE X QUANTITY FOR ALL ITEMS BID IN SECTION B). **$**_____

		Quantity	Unit of Measure	Unit Price	Total Amount

SECTION C: SIGN MATERIALS

ALUMINUM SIGN BLANKS

5.15 Traffic Sign Blank, for traffic control sign; aluminum, per ASTM Specification B-209-07, Alloy 5052-H38; to conform to Federal MUTCD and Standard Highway Signs - 197; rounded corners with three (3) holes of 3/8" diameter centered 3" from top and bottom (unless otherwise specified, the third hole shall be centered and in line with the top and bottom holes); each blank shall have a uniformly flat surface and be free of buckles, warps, dents and burrs; finish to be chemical conversion treatment conforming to ASTM Specification B449, Class 4; a sample of each sign blank shall be submitted for approval prior to delivery; order shall be skid-packed and securely banded to prevent damage during handling and shipping; sign blanks shall be of the shape, size and gauge as specified.

5.15.1	**30551 010 001** Rectangles, 12" x 18", .063 gauge	100	EA	$_____	$____
	STATE BRAND_____				
	STATE MODEL NUMBER_____				
5.15.2	**30551 010 002** Rectangles, 24" x 30", .080 gauge	425	EA	$_____	$_____
	STATE BRAND_____				
	STATE MODEL NUMBER_____				

		Quantity	Unit of Measure	Unit Price	Total Amount
5.15.3	**30551 010 003** Rectangles, 24" x 36", .080 gauge	725	EA	$_____	$_____
	STATE BRAND_____				
	STATE MODEL NUMBER_____				
5.15.4	**30551 010 004** Rectangles, 30" x 36", .080 gauge	400	EA	$_____	$_____
	STATE BRAND_____				
	STATE MODEL NUMBER_____				
5.15.5	**30551 010 005** Rectangles, 36" x 48", .080 gauge (No corners, no holes)	5	EA	$_____	$_____
	STATE BRAND_____				
	STATE MODEL NUMBER_____				

		Quantity	Unit of Measure	Unit Price	Total Amount
5.15.6	**30551 010 006** Rectangles, 48" x 48", .080 gauge (No corners, no holes) **STATE BRAND**_____ **STATE MODEL NUMBER**_____	5	EA	$_____	$_____
5.15.7	**30551 010 217** Pentagon, 30", .080 gauge **STATE BRAND**_____ **STATE MODEL NUMBER**_____	400	EA	$_____	$_____
5.15.8	**30551 010 218** Squares, 30", .080 gauge (may be ordered with holes punched diagonally) **STATE BRAND**_____ **STATE MODEL NUMBER**_____	800	EA	$_____	$_____
5.15.9	**30551 010 219** Squares, 24", .080 gauge (may be ordered with holes punched diagonally) **STATE BRAND**_____ **STATE MODEL NUMBER**_____	1200	EA	$_____	$_____

		Quantity	Unit of Measure	Unit Price	Total Amount
5.15.10	**30551 010 220** Square, 18" .080 gauge **STATE BRAND**_____ **STATE MODEL NUMBER**_____	200	EA	$_____	$____
5.15.11	**30551 010 221** Square, 36" .080 gauge **STATE BRAND**_____ **STATE MODEL NUMBER**_____	10	EA	$_____	$_____
5.15.12	**30551-010-190** 30" X 30" X .080 ALUMINUM, OCTAGON, WITH THREE HOLES PUNCHED; **STATE BRAND**_____ **STATE MODEL NUMBER**_____	5000	EA	$_____	$_____
5.15.13	**30551 010 222** Triangle, 36", .080 gauge **STATE BRAND**_____ **STATE MODEL NUMBER**_____	1	EA	$_____	$____

		Quantity	Unit of Measure	Unit Price	Total Amount
5.15.14	**30551 010 067** PLATE ALUMINUM, 9" X 2" .040 GAUGE. HOLES EXACT LOCATION TO BE DETERMINED by STREETS DEPARTMENT. **STATE BRAND**_____ **STATE MODEL NUMBER**_____	1	EA	$____	$____
5.15.15	**30551-010-070** SIGN, STREET NAME, EXTRUDED, 6 3/4" X 30", BLANK. **STATE BRAND**_____ **STATE MODEL NUMBER**_____	100	EA	$____	$____
5.15.16	**30551 010 021** 18" x 10", Aluminum, .063 gauge, cut to order, per attached drawing. **STATE BRAND**_____ **STATE MODEL NUMBER**_____	3000	EA	$____	$____
5.15.17	**30551 010 017** 36" x 12", Aluminum, .100 gauge, outside dimensions cut to shape, per attached drawing. **STATE BRAND**_____ **STATE MODEL NUMBER**_____	2000	EA	$____	$____

		Quantity	Unit of Measure	Unit Price	Total Amount
5.15.18	**30551 010 026** 36" x 18", Aluminum, .100 gauge, dimensions cut to shape per attached drawing. **STATE BRAND**_____ **STATE MODEL NUMBER**_____	300	EA	$_____	$____
5.15.19	**30551 010 023** 36" x 24", Aluminum, .100 gauge, dimensions cut to shape per attached drawing. **STATE BRAND**_____ **STATE MODEL NUMBER**_____	1200	EA	$_____	$____
5.15.20	**30551-010-080** STREET NAME BLANK, 48" X 12" ALUMINUM .100 GAUGE, DIMENSION CUT TO SHAPE **STATE BRAND**_____ **STATE MODEL NUMBER**_____	500	EA	$_____	$_____
5.15.21	**30551 010 022** 48" x 18", Aluminum, .100 gauge, dimensions cut to shape per attached drawing. **STATE BRAND**_____ **STATE MODEL NUMBER**_____	250	EA	$_____	$_____

		Quantity	Unit of Measure	Unit Price	Total Amount
5.15.22	**30551 010 024** 48" x 24", Aluminum, .100 gauge, dimensions cut to shape per attached drawing. **STATE BRAND**_____ **STATE MODEL NUMBER**_____	100	EA	$____	$_____
5.15.23	**30551 010 134** Traffic Sign Blank, Aluminum Sheets, 3' x 8', .080 gauge, 5052 H38 Alloy, No Holes, No Corners. **STATE BRAND**_____ **STATE MODEL NUMBER**_____	5	EA	$_____	$_____
5.15.24	**30551 010 135** Traffic Sign Blank, Aluminum Sheets, 3' x 12', .080 gauge, 5052 H38 Alloy, No Holes, No Corners. **STATE BRAND**_____ **STATE MODEL NUMBER**_____	5	EA	$_____	$_____

		Quantity	Unit of Measure	Unit Price	Total Amount
5.15.25	**30551 010 136** Traffic Sign Blank, Aluminum Sheets, 4' x 8', .080 gauge, 5052 H38 Alloy, No Holes, No Corners. **STATE BRAND**_____ **STATE MODEL NUMBER**_____	5	EA	$_____	$_____
5.15.26	**30551 010 133** Traffic Sign Blank, Aluminum Sheets, 4' x 12', .080 gauge, 5052 H38 Alloy, No Holes, No Corners. **STATE BRAND**_____ **STATE MODEL NUMBER**_____	5	EA	$_____	$_____
5.15.27	**30551-010-200** SHEETS, ALUMINUM, 10'X4' 125. **STATE BRAND**_____ **STATE MODEL NUMBER**_____	5	EA	$_____	$_____
5.15.28	**30551-010-201** SHEETS, ALUMINUM, 10'X5' 125. (TO BE CUT INTO 8 EACH 60" X 30" SHEETS) **STATE BRAND**_____ **STATE MODEL NUMBER**_____	5	EA	$_____	$_____

		Quantity	Unit of Measure	Unit Price	Total Amount
5.15.29	**30551-010-202** SHEETS, ALUMINUM, 12'X4' 125. **STATE BRAND**_____ **STATE MODEL NUMBER**_____	5	EA	$_____	$_____
5.15.30	**30551 010 402** Rectangle, 12" x 18", .063 gauge, baked enamel sign blank, white, one side with Philadelphia hole punching. **STATE BRAND**_____ **STATE MODEL NUMBER**_____	9000	EA	$_____	$_____
5.15.31	**30551-010-205** Sign Blank, 12" X 24", .080 white high intensity prismatic sheeting, 1 side with Philadelphia hole punching. **STATE BRAND**_____ **STATE MODEL NUMBER**_____	50	EA	$_____	$____

		Quantity	Unit of Measure	Unit Price	Total Amount
5.15.32	**30551 010 206** Sign blank, 12" X 24", .080 with Philadelphia hole punching. **STATE BRAND**_____ **STATE MODEL NUMBER**_____	50	EA	$_____	$____
5.15.33	**30551 010 113** Traffic Sign Blank; 18" X 24" rectangles **STATE BRAND**_____ **STATE MODEL NUMBER**_____	100	EA	$_____	$____
5.15.34	**0551 010 146** Sign; painted blanks one side white. 24"X36"X.080 **STATE BRAND**_____ **STATE MODEL NUMBER**_____	50	EA	$_____	$_____
5.15.35	**30551 010 230** Pentagon, 36"x36", .080 gauge **STATE BRAND**_____ **STATE MODEL NUMBER**_____	250	EA	$_____	$_____

		Quantity	Unit of Measure	Unit Price	Total Amount
5.15.36	**30551 010 231** Circle, 30"x30", .080 gauge **STATE BRAND**_____ **STATE MODEL NUMBER**_____	100	EA	$_____	$_____
5.15.37 .	**30551 010 232** Rectangles, 48"x16", 100 gauge, with mounting holes **STATE BRAND**_____ **STATE MODEL NUMBER**_____	250	EA	$_____	$_____
5.15.38	**30551 010 233** Rectangles, 60"x16", .100 gauge, with mounting holes **STATE BRAND**_____ **STATE MODEL NUMBER**_____	250	EA	$_____	$_____
5.15.39	**30551 010 234** Rectangles, 72"x16", .100 gauge, with mounting holes **STATE BRAND**_____ **STATE MODEL NUMBER**_____	250	EA	$_____	$_____

		Quantity	Unit of Measure	Unit Price	Total Amount
5.15.40	**30551 010 235** Rectangles, 84"x16", .100 gauge, with mounting holes **STATE BRAND**_____ **STATE MODEL NUMBER**_____	250	EA	$_____	$_____
5.15.41	**30551 010 236** Rectangles, 96"x16", .100 gauge, with mounting holes **STATE BRAND**_____ **STATE MODEL NUMBER**_____	250	EA	$_____	$_____

5.16 Traffic Sign Face for traffic control signs; reflective sheeting conforming to PA Dept. of Transportation Specifications for Reflective Sheeting Materials - Class IV High Intensity Prismatic Reflective Sheeting or equivalent pressure sensitive material with compatible ink and reflective sheeting and manufacturer shall be approved by PennDOT; to conform to Federal MUTCD Standards and PennDOT Regulations; each sign face shall be a complete and finished product and ready for application to the aluminum sign blank; each sign face shall have an edge marker imprinted on each side to permit its proper alignment on the sign blank surface; a sample of each sign face shall be submitted for approval prior to delivery; sign faces shall be packed 100 per carton with a protective liner interleaving each sign face; liner must cover face to prevent sticking.

Must be covered with premium transparent protective overlay film designed for application to sign faces reflectorized with retroreflective sheeting to provide a superior barrier to staining by graffiti and other markings.

The protective overlay film shall be clear, non-chlorinated, colorless film which may be used in lieu of clear coating. It must be acrylic. It shall be durable, solvent resistant and shall be coated with a transparent, UV stabilized pressure sensitive adhesive protected by an easily removable paper liner. The protective overlay shall be compatible with reflective sheeting and inks used for signing. The compatibility shall be clearly designated by the manufacturers of each component or, alternately, each component shall be produced by a single manufacturer. Minimum tensile strength of 4500 psi when tested at 72 degrees F (23 degrees C) using a jaw speed of 5 inches per minute. The protective overlay without adhesive shall have a minimum melt point of 520 degrees F (270 degrees C). The overlay film, without adhesive, shall provide a minimum of 95% transmittance of light in the visible range (400-700 nanometers).

It shall remain transparent through the expected life of the sheeting to which it is applied. The overlay film manufacturer shall identify acceptable systems sufficient to clean paint and other surface contaminants without damaging the sign face. The expected performance life of a sign face constructed of overlay film and reflective sheeting shall be equivalent to the expected performance life of the retroreflective material used. The protective overlay film, without adhesive, shall show no swelling or crazing after immersion in any of the following solvents for seven (7) days: methylene chloride toluene, ethyl acetate, gasoline, mineral spirits, naptha. The overlay film, when stored in accordance with the manufacturer's recommendations, shall be suitable for use up to one year from date of purchase. Reference: 3M #1160. Manufacturer shall be approved by PennDOT to conform to Federal MUTCD Standards and PennDOT Regulations.

		Quantity	Unit of Measure	Unit Price	Total Amount
SIGN FACES					
5.16.1	**30551 010 075** Sign, One Way, Right, 36X12, R6-1R; pressure sensitive, with clear overlay film for graffiti resistance. 3M #3930-1160 HIP **STATE BRAND**_____ **STATE MODEL NUMBER**_____	1000	EA	$_____	$____
5.16.2	**30551 010 076** Sign, One Way, Left, 36X12, R6-1L; pressure sensitive with clear overlay film for graffiti resistance. 3M #3930-1160 HIP. **STATE BRAND**_____ **STATE MODEL NUMBER**_____	1000	EA	$_____	$____
5.16.3	**30551 010 077** Sign, All Way 18"X10", R1-4; pressure sensitive with clear overlay film for graffiti. **STATE BRAND**_____ **STATE MODEL NUMBER**_____	1000	EA	$_____	$____

		Quantity	Unit of Measure	Unit Price	Total Amount
5.16.4	**30551 010 078 00** Sign, Do Not Enter, R5-1; 30X30 pressure sensitive face, clear overlay film for graffiti resistance.	1000	EA	$_____	$____

STATE BRAND_____

STATE MODEL NUMBER_____

5.17 **30551 010 191**

Stop face, Retroflective Microprismatic with Durable Internal Image, for traffic control sign; must conform to PennDOT Specification for Reflective Sheeting Material, shall be approved by PennDOT to conform to Federal MUTCD Standards and PennDOT Regulations. The retroflective sheeting shall be new material consisting of continuous microprisms. The sheeting shall have a smooth front surface. The legend "STOP" shall not be exposed on the front surface, but shall be in direct contact with a covering film, which is solid in color, clear film of UV-resistant and weather resistant resin. The sign sheeting shall be manufactured so as to include the "STOP" image and the covering film as an integral part of the sheeting. The film covering image, no less than .0015 inches (1.6 mm) in thickness, may not be a solvent-evaporated coating nor a film applied subsequently using pressure-sensitive adhesive. The white retroflective sheeting shall meet the photometric requirements of ASTM Standard specification for Retroreflecive Sheeting for Traffic Control, values as proposed for ASTM Type IV sheeting. Retroflective STOP sign faces are expected to perform effectively for a minimum of ten (10) years. Vendor shall supply a copy of the sheeting manufacturer's written warranty, including full replacement provisions (material and labor) for the first seven (7) year and material replacement only for the first three (3) years. Reference 3M

Sign Faces “STOP”, high intensity R1-1, 30" X 30" .080	1000	EA	$____	$____

STATE BRAND_____

STATE MODEL NUMBER_____

5.18 **30551 010 188**
STOP SIGN
Traffic Sign Blank, for traffic control sign; aluminum per ASTM Specification B-209-07, Alloy 5052-H38; to conform to latest Federal MUTCD and Standard Highway Signs - 197, punched with one (1) 3/8" hole centered 3" from the top and bottom edge of the blank. There shall be a 3/8" hole in line with the top and bottom holes in the center of the blank.

Each blank shall have a uniformly flat surface and be free of buckles, warps, dents and burrs; finish to be chemical conversion treatment conforming to ASTM Specification B449, Class IV.

Stop Face, for traffic control sign; reflective sheeting conforming to PennDOT Specification for Reflective Sheeting Material - Class IV 3M #3930 High Intensity Prismatic. Must be covered with premium transparent protective overlay film designed for application to sign faces reflectorized with retroreflective sheetings to provide a superior barrier to staining by graffiti and other markings.

The protective overlay film shall be clear, non-chlorinated, colorless film which may be used in lieu of clear coating. It must be acrylic. It shall be durable, solvent resistant and shall be coated with a transparent, UV stabilized pressure sensitive adhesive protected by an easily removable paper liner. The protective overlay shall be compatible with reflective sheeting and inks used for signing. The compatibility shall be clearly designated by the manufacturers of each component or, alternately, each component shall be produced by a single manufacturer.

Minimum tensile strength of 4500 psi when tested at 72 degrees F (23 degrees C) using a jaw speed of 5 inches per minute. The protective overlay without adhesive shall have a minimum melt point of 520 degrees F (270 degrees C).

The overlay film, without adhesive, shall provided a minimum of 95% transmittance of light in the visible range (400-700 nanometers). It shall remain transparent through the expected life of the sheeting to which it is applied. The protective overlay film, without adhesive, shall show no swelling or crazing after immersion in any of the following solvents for seven (7) days: methylene chloride, toluene, ethyl acetate, gasoline, mineral spirits, naphtha. The overlay film manufacturer shall identify acceptable systems sufficient to clean paint and other surface contaminants without damaging the sign face.

Quantity	Unit of Measure	Unit Price	Total Amount

The expected performance life of a sign face constructed of overlay film and reflective sheeting shall be equivalent to the expected performance life of the retroreflective material used. The overlay film, when stored in accordance with the manufacturer's recommendations, shall be suitable for use up to one year from date of purchase. Reference: 3M#1160. Manufacturer shall be approved by PennDot to conform to Federal MUTCD Standards and PennDOT Regulations.

The initials P.T.E. shall appear on the lower left hand corner of the white margin to identify the sign.

Slip sheeting shall be placed between each sign with the glossy side against the sign; do not use high intensity packing between the signs; order shall be skid-packed and securely banded to prevent shifting and damage during handling. A maximum of 150 signs to a skid. A sample shall be submitted for approval prior to delivery.

R5-1, 30" X 30" X. 080 3000 EA $_____ $_____

STATE BRAND_____

STATE MODEL NUMBER_____

5.19 **30551 010 078**
DO NOT ENTER
Traffic Sign Blank, for traffic control sign; aluminum per ASTM Specification B-209-07, Alloy 5052-H38; to conform to latest Federal MUTCD and Standard Highway Signs – 197, punched with one (1) 3/8" hole centered 3" from the top and bottom edge of the blank. There shall be a 3/8" hole in line with the top and bottom holes in the center of the blank.

Each blank shall have a uniformly flat surface and be free of buckles, warps, dens and burr; finish to be chemical conversion treatment conforming to ASTM Specification B449, Class IV.

Do Not Enter, for traffic control sign; reflective sheeting conforming to PennDot Specifications for Reflective Sheeting Material – Class IV PennDot Specification for Reflective Sheeting Material – Class IV High Intensity Prismatic, reflective sheeting material and manufacturer shall be approved by PennDot to conform to Federal MUTCD Standards and PennDot regulations. Must be covered with premium transparent protective overlay film designed for application to sign faces reflectorized with retroreflective sheetings to provide a superior barrier to staining by graffiti and other markings. Reference: 3M #1160.

The protective overlay film shall be clear, non-chlorinated, colorless film which may be used in lieu of clear coating. It must be acrylic. It shall be durable, solvent resistant and shall be coated with a transparent, UV stabilized pressure sensitive adhesive protected by an easily removable paper liner. The protective overlay shall be compatible with reflective sheeting and inks used for signing. The compatibility shall be clearly designated by the manufacturers of each component or, alternately, each component shall be produced by a single manufacturer.

Minimum tensile strength of 4500 psi when tested at 72 degrees F (23 degrees C) using a jaw speed of 5 inches per minute. The protective overlay without adhesive shall have a minimum melt point of 520 degrees F (270 degrees C).

The overlay film, without adhesive, shall provided a minimum of 95% transmittance of light in the visible range (400-700 nanometers). It shall remain transparent through the expected life of the sheeting to which it is applied. The protective overlay film, without adhesive, shall show no swelling or crazing after immersion in ay of the following solvents for seven (7) days: methylene chloride, toluene, ethyl acetate, gasoline, mineral spirits, naphtha. The overlay film manufacturer shall identify acceptable systems sufficient to clean paint and other surface contaminants without damaging the sign face. The expected performance life of a sign face constructed of overlay film and reflective sheeting shall be equivalent to the expected performance life of the retroreflective material used. The overlay film, when stored in accordance with the manufacturer's recommendations, shall be suitable for use up to one year from date of purchase. Reference: 3M #1160. Manufacturer shall be approved by PennDot to conform to Federal MUTCD Standards and PennDot Regulations.

	Quantity	Unit of Measure	Unit Price	Total Amount

Slip sheeting shall be placed between each sign with the glossy side against the sign; do not use high intensity packing between the signs; order shall be skid-packed and securely banded to prevent shifting and damage during handling. A maximum of 150 signs to a skid.

A sample shall be submitted for approval prior to delivery.

30" X 30" X .080 HIP	250	EA	$_____	$_____

STATE BRAND_____

STATE MODEL NUMBER_____

5.20 **Traffic Sign Blank, for traffic control sign; Aluminum Composite Panel (ACP)** composed of a special homogeneous Low Density Polyethylene (LDPE) core material sandwiched between two aluminum skins. LDPE is an eco-friendly, non-toxic, recyclable thermoplastic material. Aluminum composite panel to be 2mmthickness/.080 thickness with both skins having the same thickness to avoid Warping or distortion. Tensile strength to meet ASTM Specification D-638M; Fexural Modulus strength to meet ASTM specification D-790M. Aluminum composite blanks to have rounded corners with three (3) holes of 3/8" (unless otherwise specified, the third hole shall be centered and in line with the top and bottom holes); each blank shall have a uniformly flat surface and be free of buckles, warps, dents and burrs.

ACP to be protected by 0.08 mm thick protective film applied to the panel surface during manufacturing. Film protects top service coated surface while handling, fabricating or installing. It is recommended to remove the protective film within maximum of 45 days. STOP Face, DO NOT ENTER Face, ONEWAY Face, for traffic control sign; reflective sheeting Material – Class IV 3M #3930 High Intensity Prismatic, Must be covered with premium transparent protective overlay film designed for application to sign faces reflectorized with retro reflective sheetings to provide a superior barrier to staining by graffiti and other markings..

The protective overlay film shall be clear, non-chlorinated, colorless film which may be used in lieu of clear coating. It must be acrylic. It shall be durable, solvent resistant and shall be coated with a transparent, UV stabilized pressure sensitive adhesive protected by an easily removable paper liner. The protective overlay shall be compatible with reflective sheeting and inks used for signing. The compatibility shall be clearly designated by the manufacturers of each component or, alternately, each component shall be produced by a single manufacturer. Minimum tensile strength of 4500 psi when tested at 72 degrees F (23 degrees C) using a jaw speed of 5 inches per minute. The protective overlay without adhesive shall have a minimum melt point of 520 degrees F (270 degrees C). The overlay film, without adhesive, shall provide a minimum of 95% transmittance of light in the visible range (400-700 nanometers). It shall remain transparent through the expected life of the sheeting to which it is applied. The overlay film manufacturer shall identify acceptable systems sufficient to clean paint and other surface contaminants without damaging the sign face. The expected performance life of a sign face constructed of overlay film and reflective sheeting shall be equivalent to the expected performance life of the retroreflective material used. The protective overlay film, without adhesive, shall show no swelling or crazing after immersion in any of the following solvents for seven (7) days: methylene chloride, toluene, ethyl acetate, gasoline, mineral spirits, naphtha. The overlay film, when stored in accordance with the manufacturer's recommendations, shall be suitable for use up to one year from date of purchase. Reference: 3M#1160P.
Manufacturer shall be approved by PennDOT to conform to Federal MUTCD Standards and PennDOT Regulations. The Initials P.T. E. shall appear on the lower left hand corner of the white margin to identify the sign. Slip sheeting shall be placed between each sign with the glossy side against the sign; do not use high intensity packing between the signs; order shall be ski-packed and securely banded to prevent shifting and damage during handling. A maximum of 150 signs to a skid.
A sample shall be submitted for approval prior to delivery.

		Quantity	Unit of Measure	Unit Price	Total Amount
5.20.1	**30551 010 225** **STOP** Sign, 30" X 30" Octagon, ACP blank, 2mm/.080 gauge, Face, High Intensity Prismatic Grade Reflective Sheeting, Reference: 3M #3930, with Compatible overlay film, Reference: 3M #1160 **STATE BRAND**_____ **STATE MODEL NUMBER**_____	1,000	EA	$_____	$_____
5.20.2	**30551 010 226** **DO NOT ENTER** Sign, 30" x 30" Square, ACP blank, 2mm/.080 gauge, Face, High Intensity Prismatic Grade Reflective Sheeting, Reference: 3M #3930, with compatible overlay film, Reference: 3M #1160	1,000	EA	$_____	$_____
5.20.3	**30551 010 227** **ONEWAY** Sign, Double Sided, 36" X 12" ACP blank, 2mm/.080 gauge, #3930 High Intensity Prismatic Grade Reflective Sheeting, with compatible overlay film, Reference: 3M #1160 **STATE BRAND**_____ **STATE MODEL NUMBER**_____	1,000	EA	$_____	$_____

		Quantity	Unit of Measure	Unit Price	Total Amount
5.20.4	**30551 010 240** **Square,** 30" X 30", ACP blank, 2mm/.080 gauge (may be ordered with holes punched diagonally) **STATE BRAND**_____ **STATE MODEL NUMBER**_____	1,000	EA	$_____	$_____
5.20.5	**30551 010 228** **Rectangle,** 36" X 12", ACP blank, 2mm/.080 gauge **STATE BRAND**_____ **STATE MODEL NUMBER**_____	1,000	EA	$_____	$_____
5.20.6	**30551 010 229** Octagon, 30" X 30", ACP blank, 2mm/.080 gauge **STATE BRAND**_____ **STATE MODEL NUMBER**_____	1,000	EA	$_____	$_____

		Quantity	Unit of Measure	Unit Price	Total Amount
5.21	**30551 010 189** One Way Signs, 36" x 12", aluminum, .080 gauges, High Intensity Prismatic, reflective sheeting; MUST MEET SPECFICATION FOR MATERIAL for the aluminum blank and traffic sign face (pressure-sensitive or heat activated). The initials P.T.E. shall appear on the lower left hand corner of the white margin to identify sign; packing instructions the same as the finished stop sign. 3M #3939 for reference.				
	One Way, double faced, high Intensity grade sheeting, R6-1, 36" X 12" X .080	1,000	EA	$_____	$_____
	STATE BRAND_____				
	STATE MODEL NUMBER_____				
5.22	Traffic Sign Blank for traffic control sign; aluminum per ASTM Specification B-2029; Alloy 5052-H38; to conform to Federal MUTCD-1978 and Standard Highway signs-197 with standard rounded corners and punched with three (3) holes of 3/8" diameter, the third hole shall be centered in line with the top and bottom holes; a maximum of 500 signs to a skid.				
5.22.1	**30551 010 160** No Parking, 12X 18X .063, engineer grade, R8-3R (right)	200	EA	$_____	$_____
	STATE BRAND_____				
	STATE MODEL NUMBER_____				
5.22.2	**30551 010 161** No Parking, 12X 18X .063, engineer grade, R8-3L (left)	200	EA	$_____	$_____
	STATE BRAND_____				
	STATE MODEL NUMBER_____				

		Quantity	Unit of Measure	Unit Price	Total Amount
5.22.3	**30551 010 195** "Yield", 36"X36"X .080, high intensity prismatic) **STATE BRAND**_____ **STATE MODEL NUMBER**_____	200	EA	$_____	$_____
5.22.4	**30551 010 139** School Crossing FYG diamond grade 30 X 30 X .080 S1-1 **STATE BRAND**_____ **STATE MODEL NUMBER**_____	250	EA	$_____	$_____
5.22.5	**30551 010 237** **SCHOOL CROSSING**, S1-1 Sign, 36""X 36"X .080, FYG DG Reflective Reference: 3M Series #3983 Must have compatible protective Overlay film. Reference: 3M #1160 **STATE BRAND**_____ **STATE MODEL NUMBER**_____	500	EA	$_____	$_____

		Quantity	Unit of Measure	Unit Price	Total Amount
MISCELLANEOUS SIGN PRODUCTS					
5.23	**30551 010 155** Foam Board, 3MM X48" X 96", white. Sintra for ref. **STATE BRAND**_____ **STATE MODEL NUMBER**_____	30	EA	$_____	$_____
5.24	**30586 000 168** Sheeting, magnetic, white, 24" X 25'. **STATE BRAND**_____ **STATE MODEL NUMBER**_____	1	RL	$_____	$_____
5.25	**30551 010 210** Screen Wash. Components: ethanol, methanol, 2 - pentatone, 4-methyl-acetic acid ethyl ester heptane. Ethanol PSF III 190 PDF. **STATE BRAND**_____ **STATE MODEL NUMBER**_____	10	EA	$_____	$_____

DO NOT USE HIGH INTENSITY PACKING BETWEEN SIGNS

		Quantity	Unit of Measure	Unit Price	Total Amount
5.26	**30551 010 211** Citrus based cleaner for cleaning protective overlay film #1130 **STATE BRAND**_____ **STATE MODEL NUMBER**_____	10	EA	$_____	$_____
5.27	**30551 010 430** Coroplast Sheets, Orange, 18" X 24", Rectangles, No Holes, No corners **STATE BRAND**_____ **STATE MODEL NUMBER**_____	500	EA	$_____	$_____

EXTENDED TOTAL BID AMOUNT FOR SECTION C ONLY (UNIT PRICE X QUANTITY FOR ALL ITEMS BID IN SECTION C). **$**_____

		Quantity	Unit of Measure	Unit Price	Total Amount
Section D - Sign Mouning Hardware					
5.28	**30551 010 187** Sign mounting bracket, rigid for Windmaster sign stand. #SA-01729. **STATE BRAND**_____ **STATE MODEL NUMBER**_____	50	EA	$_____	$____
5.29	Sign Mounting and Stiffening Hardware To meet AASHTO Standard Specifications 1994 for Structural Support. Extrusions to offer proper support to the sign blank for maximum reflectivity and to offer a framework for multiple sign installations. Extrusions to be attached to the sign blank without damage to the reflective sheeting. Extrusions to mount to any type pole or post.				
5.29.1	**31050 100 100** Medium Extrusion. 6061-T6 Aluminum. Supports signs 3 ft. to 18 ft. in width. 10' Stock lengths. 1" h x 1" w. Reference: SignFix® Hardware. **STATE BRAND**_____ **STATE MODEL NUMBER**_____	25	EA	$_____	$____

		Quantity	Unit of Measure	Unit Price	Total Amount
5.29.2	**31050 100 101** Large Extrusion. 6061-T6 Aluminum. Supports signs 10 ft. to 30 ft. in width. 10' to 16' Stock lengths. 1 1/2" h x 1 1/2" w. Reference: SignFix® Hardware. **STATE BRAND**_____ **STATE MODEL NUMBER**_____	25	EA	$_____	$____
5.30	**31671 511 754** Bracket, Sign, flared leg stainless steel, 3/4" wide, for mounting of traffic sign, no bolts required. Packed 50 per box; band-it #d022 for ref. only. **STATE BRAND**_____ **STATE MODEL NUMBER**_____	60	BX	$_____	$____
5.31	**31671 511 756** Bracket, Sign; 100 stainless steel cantilever sign brackets,10 CARTONS OF #C-SS used for mounting two-sided and cantilever type signs on poles 2" or more in diameter. Use with nut and bolt. **STATE BRAND**_____ **STATE MODEL NUMBER**_____	10	CT	$_____	$____

		Quantity	Unit of Measure	Unit Price	Total Amount
Vandal Proof Hardware					
5.32	**31050 100 102** Vandal proof hardware system - fits all 1.25" chain link fences. Package of 144 pieces - 48 each sign grabbers, 48 each bolts, 48 each nuts. Sign Grabber SG1-48. **STATE BRAND**_____ **STATE MODEL NUMBER**_____	10	PK	$_____	$____
5.33	**31050 100 103** Vandal proof hardware system - fits all 2" and 2 1/4" chain link fences. Package of 144 pieces - 48 each sign grabbers, 48 each bolts, 48 each nuts. Sign Grabber SG2-48. **STATE BRAND**_____ **STATE MODEL NUMBER**_____	10	PK	$_____	$_____
5.34	**31050 100 104** Vandal proof hardware system - fits all posts that have holes spaced 1 " center to center. Package of 96 sign grabbers. Sign Grabber SGP-96. **STATE BRAND**_____ **STATE MODEL NUMBER**_____	10	PK	$_____	$_____

		Quantity	Unit of Measure	Unit Price	Total Amount
5.35	**31050 100 105** Guard Rail Clamp 3" Clamp Base Wt. 5.38 lbs. with Upper Mast to Display Rigid and/or Roll-up signs. Attaches to H Beam Guard Rail Posts. (Includes brackets for rigid signs.) Eastern Metal/USA GS-CRC-3-LS for Ref. **STATE BRAND**_____ **STATE MODEL NUMBER**_____	10	EA	$_____	$_____
5.36	**31050 100 106** Guard Rail 5" Clamp Base Wt. 6.75 lbs. with Upper Mast to Display Rigid and/or Roll-up signs. Attaches to H Beam Guard Rail Posts. (Includes brackets for rigid signs.) Eastern Metal/USA #GS-CRC-5-LS for Ref. **STATE BRAND**_____ **STATE MODEL NUMBER**_____	10	EA	$_____	$_____
5.37	**31050 100 107** Median-Barrier Clamps Base with GS-X880 Upper Mast to Display Rigid and/or Roll-up signs. Includes leaf spring adapter and fiberglass leaf spring. (Includes brackets for rigid signs.) Eastern Metal/USA GS-X880 for Ref. **STATE BRAND**_____ **STATE MODEL NUMBER**_____	10	EA	$_____	$_____

EXTENDED TOTAL BID AMOUNT FOR SECTION D ONLY (UNIT PRICE X QUANTITY FOR ALL ITEMS BID IN SECTION D). **$_____**

SECTION E: PRODUCT FOR GERBER SYSTEM

Bidder shall provide prices for 3M™ material (**only**) used in the Gerber Graphix Advantage Computer system.

5.38 Scottie, removable graphic film with comply performance. 0.007 to 0.008 inch thickness. Clear position able pressure activated for multicolor vehicle markings. Perforated for use in Gerber type electronic cutting devices. 3M 680CR Series.

5.38.1	**30586 000 087** Size 15" x 50 yes; Red. 680CR-72	12	RL	$____	$____
5.38.2	**30580 000 088** Size 15" x 50 yes; "C" Black. 680CR-85	12	RL	$____	$____
5.38.3	**30586 000 205** Size 15" x 50yds; Gold. 680CR-64	2	RL	$____	$_____
5.38.4	**30586 000 206** Size 15" x 50yds; Yellow. 680CR-71	2	RL	$____	$_____
5.38.5	**30586 000 207** Size 15" x 50yds; Blue. 680CR-75	5	RL	$____	$_____
5.38.6	**30586 000 208** Size 15" x 50yds; Lt Blue. 680CR-76	2	RL	$____	$_____

		Quantity	Unit of Measure	Unit Price	Total Amount
5.38.7	**30586 000 209** Size 15" x 50yds; Green. 680CR-77	2	RL	$____	$_____
5.38.8	**30586-000-210** Size 15" x 50yds; Lemon Yellow. 680CR-81	2	RL	$____	$_____
5.38.9	**30586 000 211** Size 15" x 50yds; Ruby Red. 680CR-82	2	RL	$____	$_____

5.39 3M Electro cut engineer grade reflective sheeting, engineer grade, durable, enclosed lens reflective sheeting with pressure sensitive adhesive. Perforated for use in Gerber type electronic cutting devices. Meets ASTM D 4956, Type I, Class 1. 3M Series 3260.

5.39.1	**30586 000 095** Size 15" x 50yds; Blue. 3265S	8	RL	$____	$_____
5.39.2	**30586 000 212** Size 15" x 50yds; White. 3260S	8	RL	$____	$_____
5.39.3	**30586 000 213** Size 15" x 50yds; Red 3262S	8	RL	$____	$____
5.39.4	**30586 000 214** Size 15" x 50yds; Green. 3267S	8	RL	$_____	$_____

		Quantity	Unit of Measure	Unit Price	Total Amount
5.40	Diamond grade highly reflective micro prismatic sheeting with pressure sensitive adhesive for easy application to trucks, trailers and large vehicles to enhance visibility and detection distance. It is highly retro reflective, features prismatic sheeting and offers better whiteness and angularity. It has typical brightness of 900 candlepower and meets or exceeds all NHTSA requirements. Perforated for use in Gerber type electronic cutting devices. 3M Series 9 81 for ref.				
5.40.1	**30586 000 226** 15" x 50yd; Solid Red. 981- 72	150	RL	$____	$____
5.40.2	**30586 000 215** 5" x 50yd; Solid White. 981-10.	2	RL	$____	$_____
5.40.3	**30586 000 216** 15" x 50 yd; Yellow. 981-71	2	RL	$____	$_____
5.41	Reflective graphic film with comply performance. Highly durable, adhesive-coated, enclosed lens sheeting. Will withstand severe weather and handling conditions. Perforated for use in Gerber type electronic cutting devices. 3M Scotchlite Electrocut for ref.				
5.41.1	**30586 000 096** Size 15" x 50yds; Lt Blue. 7780CR-76	45	RL	$____	$_____
5.41.2	**30586 000 217** Size 15" x 50yds; White. 27780CR-10	8	RL	$____	$_____
5.41.3	**30586 000 218** Size 15" x 50yds; Gold. 7780CR-64.	5	RL	$____	$_____

		Quantity	Unit of Measure	Unit Price	Total Amount
5.41.4	**30586 000 219** Size 15" x 50yds; Yellow 7780CR-71	3	RL	$____	$_____
5.41.5	**30586 000 220** Size 15" x 50yds; Ruby Red 7780CR-82	3	RL	$____	$_____
5.41.6	**30586 000 221** Size 15" x 50yds; Black. 7780CR-85	5	RL	$____	$_____

5.42 Scotchcal Electrocut non-reflective film with pressure-sensative adhesive designed for prespaced, cut graphics on an electronic cutting apparatus.. Perforated for use in Gerber type electronic cutting devices.3M series 7720 for ref.

5.42.1	**30586 000 092** Size 15" x 50yds; Gloss White 7720-10S.	12	RL	$____	$_____
5.42.2	**30586 000 227** Size 15" x 50yds; Sapphire Blue 7720-37S	40	RL	$____	$_____
5.42.3	**30586 000 222** Size 15" x 50yds; Black. 7720-12S	5	RL	$_____	$_____
5.42.4	**30586 000 223** Size 15" x 50yds; Matte White 7720-20S	5	RL	$_____	$_____

		Quantity	Unit of Measure	Unit Price	Total Amount
5.42.5	**30586 000 224** Size 15" x 50yds; Matte Black 7720-22S	8	RL	$____	$_____
5.42.6	**30586 000 225** Size 15" x 50yds; Bright Yellow 7720-15S	4	RL	$____	$_____

EXTENDED TOTAL BID AMOUNT FOR SECTION E ONLY (UNIT PRICE X QUANTITY FOR ALL ITEMS BID IN SECTION E). **$_____**

TOTAL FOR SECTIONS A, B, C, D and E **$_____**

Bidder to state type of transport to be used in the performance of the contract resulting from this Invitation and Bid: _____

ATTACHMENTS

30551 010 021

Item 5.15.16

ALL WAY

Sign Blank

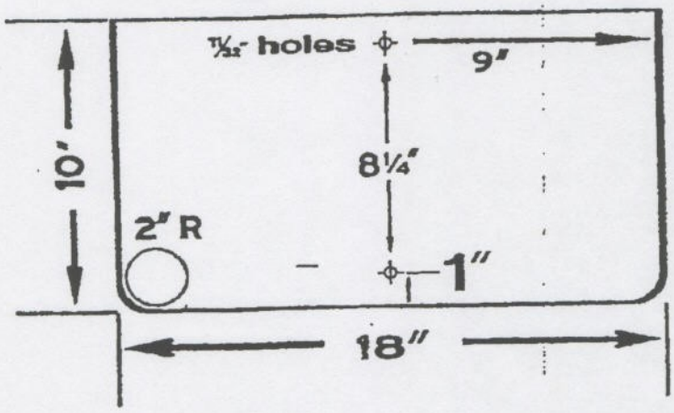

Phila. Traffic Eng.

30551 010 017

Item 5.15.17

Metro Sign Blanks

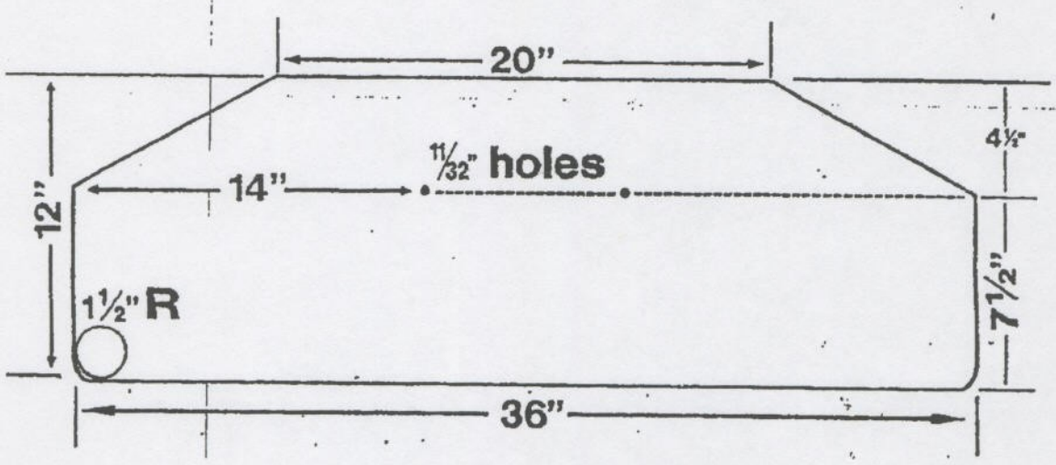

Phila. Traffic Eng.

30551 010 023

Item 5.15.19

Metro Sign Blanks

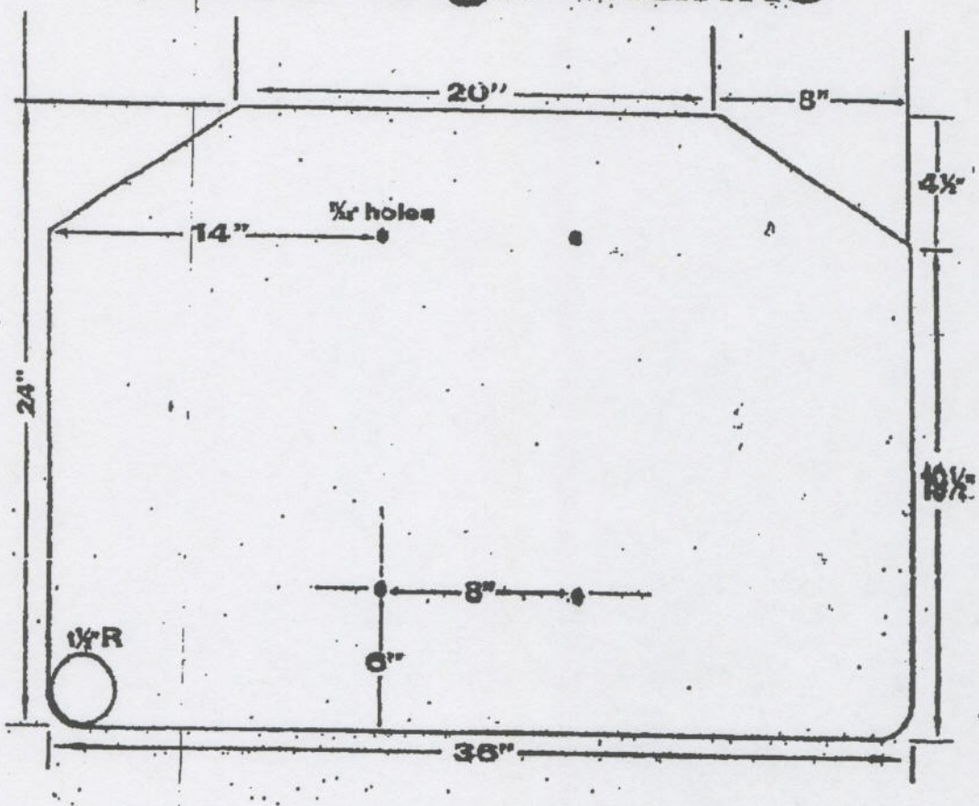

Phila. Traffic Eng.

APR 13 '95 13:42 872

30551 010 026

Item 5.15.18

Metro Sign Blanks

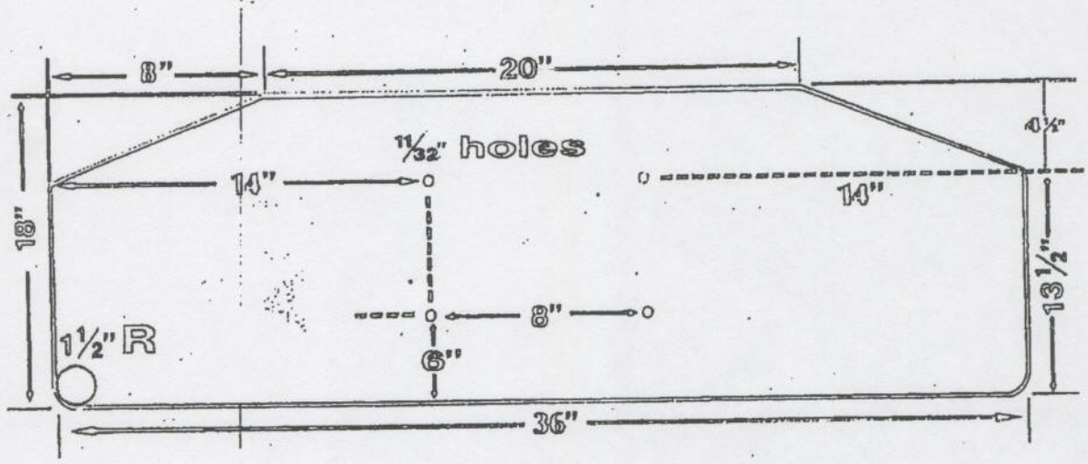

Phila. Traffic Eng.

30551 010 024
Item 5.15.22

Metro Sign Blanks

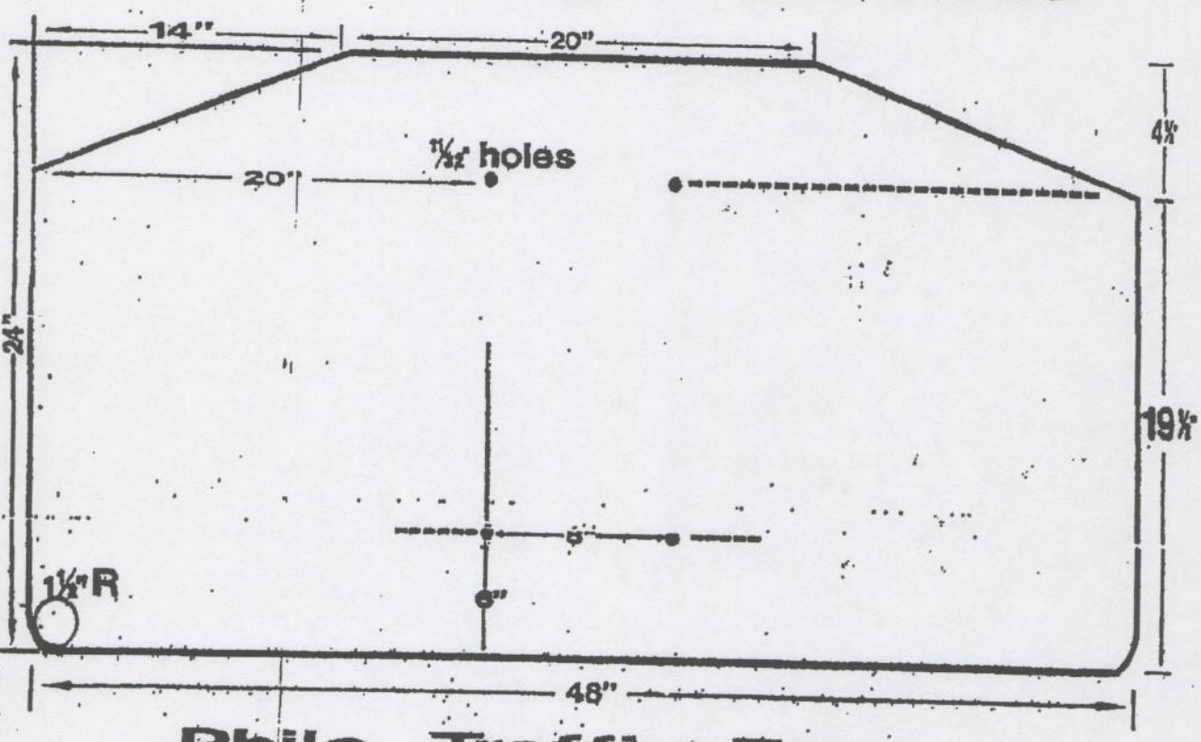

Phila. Traffic Eng.

Attention Bidder:

This bid document may not contain all of the documents that you will need to complete the bid submission. On occasion, it is not possible to include the following:

Exhibits
Drawings
Attached specifications
Attached documents

If you have not received a corresponding attachment, drawing or exhibit that is referenced in the bid document you may obtain it by contacting the Public Information Unit at 215-686-4720.

C I T Y O F P H I L A D E L P H I A

INSTRUCTIONS FOR GETTING PAID BY THE CITY OF PHILADELPHIA

The City attempts to process invoices in a timely manner. Delays can occur because of incomplete or inaccurate invoicing information. Please make sure that all your invoices contain the following information to help the City in paying you as quickly as possible.

1. **AFTER THE DELIVERY OR SERVICES HAS BEEN COMPLETED YOU MUST SUBMIT THREE (3) COPIES OF AN INVOICE FOR PAYMENT TO THE RECEIVING DEPARTMENT LISTED ON THE PURCHASE ORDER.**
2. **THE INVOICE MUST CORRECTLY REFERENCE THE PURCHASE ORDER NUMBER, THE VENDOR NAME, ADDRESS AND FEDERAL EMPLOYER IDENTIFICATION NUMBER.**
3. **CHECKS WILL ONLY BE MADE PAYABLE TO THE COMPANY NAME AS SHOWN ON THE PURCHASE ORDER; THE INVOICE MUST REFLECT THIS SAME COMPANY NAME AS THE "PAY TO".**
4. **THE INVOICE MUST SHOW THE QUANTITY AND TYPE OF ITEM OR SERVICE AND THE PRICE.**
5. **THE UNIT OF PURCHASE ON THE INVOICE MUST AGREE WITH THE UNIT CITED ON THE PURCHASE ORDER. REFERENCE TO THE SPECIFIC LINE ITEM IS HELPFUL.**

Paying vendors is the responsibility of the *receiving* City Department(s), not the Procurement Department. Vendors should bring any problems concerning payments to the attention of the appropriate City receiving department. The name and number of the contact person can generally be found on the purchase order. If all necessary paperwork has been submitted to the department and questions still remain, vendors should contact:

City of Philadelphia
Accounting Verification
Room 1340 Municipal Services Building
1401 J.F.K. Blvd.
Philadelphia, PA 19102
Tel. 215 686 6365

VENDORS INTERESTED IN RECEIVING PAYMENTS ELECTRONICALLY MUST COMPLETE AN ACH VENDOR ENROLLMENT AND CHANGE FORM. THIS FORM CAN BE DOWNLOADED FROM WWW.PHILA.GOV/BIDS.

BIDDERS GUIDELINES*

The following list will assist you in the preparation of your bid.

- Read the entire bid so that you fully understand all the requirements.
- All bids must be submitted to the City no later than the time and date stated as the bid opening.
- Note the City Anti-Discrimination Policy. If Minority Business Council Participation is required be sure to fill out all appropriate forms. If you have questions call MBEC at (215) 686-6232.
- Make sure you submit the appropriate Bid Security and Bid Submission Fee with your bid. Refer to Section 1 of the bid and the Conditions of Bidding sheet.
- Bidder must meet **all** qualifications.
- If an alternate to any item is being offered, you must follow the instructions in paragraph 2 of the Conditions of Bidding sheet.
- Does the bid require a site inspection, attendance at a Pre-Bid Meeting, samples, financial information or other data you must provide?
- Have you signed and returned all Addenda?
- If the bid is going to be awarded as a whole, you must bid on all items. See Section 3 of the bid: Bid Evaluation and Award.
- Bidders' attention is directed to the Conditions of Bidding sheet regarding the Master Performance Bond.
- Bids and pricing must be written in ink or typed. FAXed bids will not be accepted.
- **Do not** submit counter terms or conditions. **Your bid will be rejected**.
- Have you signed the Contract Page and affixed your Corporate Seal as required?
- **Do not** combine check amounts: All checks should be individual and specific.
- Please double check all mathematical calculations for errors.

If you have questions call Public Information at (215) 686-4720.

*This information is provided for guidance only and does not preclude your responsibility to read fully and respond to all portions of this bid.

CITY OF PHILADELPHIA

PROCUREMENT DEPARTMENT

Public Information Unit

ATTENTION VENDORS

If your company would like to receive the results of a particular bid, the Public Information Unit of the Procurement Department will forward this information to you at a **fee of $10.00** for **each** bid number requested. Please be advised that bid tabulations **are not available** by telephone. If you have any questions, Please call 215-686-4755 or 215-686-4756.

BID RESULTS REQUEST FORM

Pease complete form below. Only one (1) request per form.

PLEASE NOTE INCREASED FEE Date of Request: _____

Bid Number Requested: _____ Opening Date: _____

Company Name: _____

Company Representative: _____

Address: _____

_____

Telephone No.: _____ Fax No.: _____

Mail this Request to the address below and enclose the following items:

- ☐ Check or Money Order payable to **"City of Philadelphia"**
- ☐ A self-addressed stamped envelope which is at least 9 ½ " x 12 ½ " or larger for each Bid requested.

Failure to send either of the above items, will void your request.

Mail Request To:
The Procurement Department Public Information Unit
Attention: Bid Results
1401 JFK Blvd.
Room 170B
Philadelphia, PA 19102

DO NOT SEND CASH

Revised 03/07

C I T Y O F P H I L A D E L P H I A

Procurement Department
120 Municipal Services Building
Philadelphia, PA 19102-1685
(215) 686-4720
(215) 686-4716 Fax

Hugh Ortman
Procurement Commissioner

Master Bid Security Program for Service, Supplies and Equipment Bids
Period of Coverage: July 1, 2008 – June 30, 2010

(Bids for Professional Consulting Services, Public Works, Construction and Demolition [wrecking and building removal] *are not* covered under the Master Bid Security Program)

Dear Vendor:

The Philadelphia City Charter requires that each bid submission over $25,000 be accompanied by a certified check in the amount specified in the bid invitation. This requirement can be met for most bids if the Bidder is covered under the City's Master Bid Security Program. This program provides bid security coverage for Service, Supply and Equipment bids that have a total dollar value of over $25,000 up to $500,000.

To file for coverage under the Bid Security Program, for the period **July 1, 2008 to June 30, 2010**, complete the enclosed application and return it with a check for **$175.00.** Make the check payable to "**City of Philadelphia**". It is **non-refundable.** To clarify the precise use of the check, enter the words "**Bid Security Program**" **2008 – 2010** on the face of the check.

If you do not become a participant in the program at this time, you may still submit bids. However, they must be accompanied by a certified check in the amount specified in the Terms and Conditions of Bidding.

For additional information or inquiries regarding this program, please contact: The Public Information Unit at (215) 686-4719, (215) 686-4720 or (215) 686-4721.

IF A RECEIPT IS REQUESTED, PLEASE ENCLOSE A SELF-ADDRESSED STAMPED ENVELOPE.

Forward Check with Application to
CITY OF PHILADELPHIA
MASTER BID SECURITY PROGRAM
170A Municipal Services Building
Philadelphia, PA 19102-1685

Company Name: _____

Fed EIN/SSN: _____

Street Address _____

City, State, Zip: _____

Contact Person: _____

Telephone No: (___)_____Fax No: (___)_____

☐ A. Check payable to the City of Philadelphia in the amount of $175.00 for 7/1/08 to 6/30/10

DO NOT SEND CASH. NO PERSONAL CHECKS.

Internal Use Only

Rcvd. ___/___/___ Pymt. Type _____ Ck. Amt. $ _____ Ck.# _____

C I T Y O F P H I L A D E L P H I A

Office of the Director of Finance
Room 1330, Municipal Services Bldg.
1401 John F. Kennedy Boulevard
Philadelphia, Pa 19102-1685

Rob Dubow
Director of Finance

The City of Philadelphia is pleased to announce a **Vendor Information Payment System (VIPS)** which will allow businesses such as yours to inquire about the status of invoices billed against purchase orders and professional services contracts. The only requirement is that your invoices utilize a unique number – either alpha, numeric or a combination of the two.

This system will be operational twenty four hours a day, seven days a week. All you have to do is dial **215-686-5968**, and follow the prompts to get an up-to-date status on your payments.

Enclosed for your convenience is an easy to use reference guide which provides a brief overview of what you can expect. I urge you to give it a try and see for yourself how easy it is to use. If you should happen to experience any problems, or if you would like to comment on this system, please call the **Office of the Director of Finance** at **215-686-6167**.

I believe that you will find this way of obtaining payment information convenient and easy to use.

Vendor Information Payment Reference Guide

- 1- Call 215-686-5968.
- 2- After the prompts,enter the 8 numeric characters that uniquely identifies your purchase order.
- 3- Select one of the three inquiry options:
  - a) by your purchase order.
  - b) by your company.
  - c) by your specific invoice number.
    - (Numeric invoice numbers only)

TERMS AND CONDITIONS OF BIDDING AND CONTRACT

BID SUBMISSION

1. PREPARATION AND SUBMISSION OF BID.
All bids must be written in ink **or** typewritten and made on the forms issued and signed in ink by a person with legal authority to bind the bidder. The contract awarded hereunder shall consist of the Invitation and Bid, , all addenda thereto issued by the City, all exhibits and attachments issued and/or accepted by the City and these Terms and Conditions of Bidding and Contract (the "Contract"). It is the sole responsibility of the bidder to ensure that it has received any and all addenda and the Procurement Commissioner may in his/her sole discretion reject any bid for which all addenda have not been executed and returned in accordance with the instructions provided therein. No bid may be considered if received after the date and time for the opening of bids established by the Invitation and Bid, nor may any bid be modified after that date and time. The time of bid opening shall be the time displayed on the City's official bid clock located at the bid room. In the event of any discrepancy between actual time and the City's official bid clock, the latter shall determine the time of bid opening.

2. BID SECURITY. Unless the bidder is enrolled under the City's Annual Master Bid Security Program or an individual bid bond is required in the Invitation and Bid, all bids must be accompanied by a Certified Check, Treasurer's Check, Cashier's Check, Bank Money Order, or United States Postal Money Order made payable to the order of "The City of Philadelphia" in the proper amount as shown below:

AMOUNT OF BID OR ESTIMATED. CONTRACT	AMOUNT OF CERTIFIED CHECK
$ 30,000.00 or less	No Check Required
$ 30,000.01 - $ 99,999.99	$ 500.00
$100,000.00 - $249.999.99	$2,000.00
$250,000.00 - $499,999.99	$4,000.00
$500,000.00 or more	$6,000.00

When computing amount of Bid for Certified Check purposes, do NOT deduct for trade-ins.

Any bid in excess of $500,000 is not covered by the Annual Master Bid Security Program, and bidder must submit a certified check, treasurer's check, cashier's check, bank money order, or United States postal money order made payable to the order of "The City of Philadelphia" in the required amount.

Once the lowest responsive and responsible bidder has been determined all other bidders will receive a refund in the amount of the bid security submitted. Bid security submitted by the lowest responsive and responsible bidder will be refunded after receipt of all duly executed Contract documents, required fees, bonds or other performance security. Funds submitted for the Master Bid Security Program are not refundable.

3. BID PROCESSING FEE. In addition to bid security and any other fee or monies required to be submitted with the bid, the bid shall be accompanied by a non-refundable processing fee in the form of a separate standard check, bank money order or United States postal money order made payable to the order of "City of Philadelphia" in an amount based on the gross amount of the bid in accordance with the formula below. Cash is not acceptable.

AMOUNT OF BID OR ESTIMATED CONTRACT	AMOUNT OF PROCESSING FEE
$ 30,000.00 or less	No Check Required
$ 30,000.01 - $ 100,000.00	$ 10.00
$ 100,000.01 - $ 300,000.00	$ 30.00
$ 300,000.01 - $ 500,000.00	$ 50.00
$ 500,000.01 - $1,000,000.00	$100.00
$1,000,000.01 - $2,000,000.00	$200.00
$2,000,000.01 - $3,000,000.00	$300.00
$3,000,000.01 - $4,000,000.00	$400.00
$4,000,000.01 - $5,000,000.00	$500.00
$5,000,000.01 or more	$600.00

4. SPECIFICATIONS. When a formal, numbered, specification is referred to in the Invitation and Bid, no deviation therefrom will be permitted, except if/as indicated in the Invitation and Bid and the bidder will be required to furnish articles and/or services in conformity with that specification. When catalogues, model numbers, trade names, or cuts are listed in the Invitation and Bid, they are, unless otherwise specified, included for the purposes of furnishing bidders with information concerning the style, type or kind of article and /or service desired. A bidder may offer an article and/or service which he/she certifies to be equal or better in quality, performance and other essential characteristics. If submitting an alternate, the bidder must specify the alternate (e.g., make and model #) in the bid and submit with the bid a complete description of the article (including any technical literature) and/or service proposed to be furnished. Failure to do so will require the bidder to furnish the article and/or service specified in the Invitation and Bid. The Procurement Commissioner reserves the sole right to determine whether alternates offered are equal or better. Unless otherwise provided in the bid specifications, all items offered by the bidder must be new. A "new" item is one which will be used first by the City. This clause shall not be construed to prohibit bidders from offering goods, supplies, equipment, or materials containing recycled materials or printing with recycled content; bidders intending to provide goods made with recycled materials should notify the Procurement Department.

5. PATENTS. The successful bidder shall be solely responsible for all royalties and charges that may be due to any patent holder for or on account of the use of any patented appliance, product or processes. Evidence of such payment shall be submitted upon request of the Procurement Commissioner and failure to submit such evidence may, in the sole discretion of the Procurement Commissioner, result in rejection of the bid or constitute an event of default, entitling the City to all rights and remedies as provided herein in Section 16 and/or 18.

6. LOCAL BIDDING PREFERENCE
In accordance with Chapter 17-109 of the Philadelphia Code relating to Local Bidding Preferences for Procurement Contracts, this bid may be subject to a 5% local bid preference. In order to determine eligibility to receive the 5% preference, if applicable, bidder or subcontractor must be certified at the time of the bid opening and must submit with the bid, the Local Business Entity Certification Number* as issued by the Procurement Department for the prime contractor or the applicable subcontractor.

*Note: If you wish to apply for Local Business Entity (LBE) certification, go to www.phila.gov/bids. Please allow sufficient time prior to bidding for processing of the LBE application.

EVALUATION AND AWARD

7. TYPES OF BIDDER RESTRICTED. Bidders must not be a party to more than one bid for the same article or service. A violation of this condition may, in the sole discretion of the Procurement Commissioner, result in rejection of any or all such bids in which the bidder has an interest.

8. RESPONSIVENESS. Subject to the right of the Procurement Commissioner to waive nonresponsiveness as set forth below in this Section, these Terms and Conditions of Bidding and Contract and the specifications and requirements included in the Invitation and Bid are mandatory and must be strictly followed by all bidders in the preparation and submission of their bids. After bids are opened, the Procurement Department, and other City departments or agencies where appropriate or specified, shall review all bids for responsiveness to these Terms and Conditions of Bidding and Contract and the specifications and requirements included in the Invitation and Bid.

Any bid which is incomplete, obscure, conditional, or unbalanced, which contains additions not called for, or irregularities of any kind, including alterations or erasures, or which fails to conform in any respect to these Terms and Conditions of Bidding and Contract and the specifications and requirements included in the Invitation and Bid is nonresponsive and shall be rejected, except where the Procurement Commissioner, in his/her sole discretion, determines that the nonresponsivencss is not material to the Invitation and Bid or that a waiver of the nonresponsiveness is otherwise permitted by the Invitation and Bid, by these Terms and Conditions of Bidding and Contract or by law. The Procurement Department's determination of nonresponsiveness shall be final and any bid rejected as nonresponsive shall not be eligible for contract award.

9. RESPONSIBILITY. Unless otherwise specified, after bids are opened, the Procurement Department, and other City departments or agencies where appropriate or specified, shall review and may investigate the responsibility, including, but not limited to, the qualifications, references, capacity and ability to perform the Contract resulting from the Invitation and Bid in accordance with its terms, and integrity, of the lowest responsive bidder. All determinations of bidder responsibility shall be vested in the sole discretion of the Procurement Commissioner and other City officials. Any bidder who is deemed not responsible shall be ineligible for award of the Contract.

Bidders deemed not responsible will be notified of such determination and the reasons therefore in writing by the Procurement Department, and shall have the right to contest the determination by submitting to the Procurement Department, within forty-eight (48) hours after receipt of its written determination, a written request for reconsideration that includes information relating to the bidder's qualifications and responsibility and demonstrating the insufficiency of the reasons stated in the written determination finding the bidder not responsible. Any further determination of a contesting bidder's responsibility shall be vested in the sound discretion of the Procurement Commissioner and other City officials.

10. CANCELLATION AND AWARD. The Procurement Commissioner, in his/her sole discretion, may cancel any Invitation and Bid prior to bid opening. After bid opening, the Procurement Commissioner, in his/her sole discretion, may reject all bids, if deemed in the best interest of the City. In all cases where a Contract award is made by the Procurement Department, the bidder is bound by the terms and conditions of the Invitation and Bid upon the submission of its bid. All bids are valid for a period of not less than 60 days, or as otherwise specified in the Invitation and Bid. If the bid has not been awarded within the specified period of time, the bid shall be valid for subsequent award only upon the express consent of the bidder, with no change to the submitted bid. Any price increases/decreases expressly provided for in the Invitation and Bid will be allowed. All Contract awards shall be made by the Procurement Department upon written notice to the bidder that is determined by the Procurement Department to be the lowest responsive and responsible bidder.

11. QUANTITIES AWARDED. For requirements contracts only, the articles and quantities of such articles as set forth in the Invitation and Bid are estimates and the Procurement Commissioner, in his/her sole discretion, may make an award for all or some of the articles bid and in such quantities as the Procurement Commissioner shall deem appropriate. For firm limit contracts, it is the City's intent to award based upon the quantities set forth in the Invitation and Bid, but the City reserves the right to award more or less.

12. DELIVERY, PRICE INCREASES AND TIE BIDS. All articles must be delivered at the price(s) bid, FOB Destination. Bids containing reservations of the right to increase the price(s) bid, including, but not limited to, late payment charges, will not be considered, except where the Procurement Commissioner, in his/her sole discretion, finds it in the City's best interest to do so. In the event of an absolute tie, the award decision will be made in the best interests of the City as determined by the Procurement Commissioner.

CONTRACT EXECUTION AND CONFORMANCE

13. CONTRACTS. Awards of contracts in amounts less than or equal to $30,000 shall become contracts binding upon the City upon written notice of award by the Procurement Commissioner. Awards of contracts in amounts greater than $30,000 shall not become contracts binding upon the City until after written notice of award is made and until after all of the following conditions have been satisfied:

a. Successful bidder posts sufficient performance security, as required in the Invitation and Bid, within the time specified in the written notice of award;

b. Successful bidder posts a payment bond or other payment security, if and as required by the Invitation and Bid, within the time specified in the written notice of award;

c. Approval of the Contract as to form by the City's Law Department;

d. Certification by the Director of Finance and City Controller as to the availability of funds; and

e. Execution of the Contract by the Procurement Commissioner.

The Procurement Commissioner may, in his/her sole discretion, cancel any Contract award if any of the above conditions (a-e) are not satisfied, or if the Procurement Commissioner, in his/her sole discretion, determines cancellation to be in the best interests of the City. The bidder agrees that in the event of such cancellation, it shall not have any claim against the City, including any claim for breach of contract or of any other legal duty, or for lost profits, costs, damages, or expenses of any kind.

14. PERFORMANCE SECURITY. The City of Philadelphia requires performance security for contracts greater than $30,000. If the amount of the contract to be awarded is greater than $30,000 but less than or equal to $500,000, the successful bidder is required to participate in the City's Master Performance Security Program by paying to the City a non-refundable fee of $5.00 per thousand dollars of the contract amount for firm limit contracts and $4.00 per thousand dollars of the contract amount for requirements contracts, or as otherwise specified. If the amount of the contract to be awarded is in excess of $500,000 the successful bidder is required to furnish an individual performance bond, issued by a surety approved by the City on a form prepared by the City's Law Department and in the amount specified in the notice of contract award. The successful bidder is also required to pay a bond preparation fee to the City's Law Department in an amount prescribed by Chapter 17-700 of The Philadelphia Code; a schedule of such fees may be obtained from the Procurement Department's Public Information Office.

15. INSURANCE. Unless otherwise specified, the successful bidder (referred to in this Section as "Contractor") shall, at its sole cost and expense, procure and maintain in full force and effect, during the entire period of the Contract (including any applicable warranty and/or renewal periods), the minimum types of insurance specified below. All insurance shall be procured from reputable insurers authorized to do business in the Commonwealth of Pennsylvania and shall be acceptable to the City. All insurance required herein shall be written on an "occurrence" basis and not a "claims-made" basis. The City of Philadelphia, its officers, employees, and agents are to be named as additional insured on all policies required hereunder, except the Workers' Compensation and Employers' Liability. Also, an endorsement is required stating that the coverage afforded these parties as additional insured will be primary to any other coverage available to them. The City's coverage as an additional insured shall be primary coverage. The insurance shall provide for at least thirty (30) days prior written notice to be given to the City in the event coverage is materially changed, canceled or non-renewed. Certificates of insurance evidencing the required coverages shall be submitted to the City within fifteen (15) days of notice of contract award. The City reserves the right to require the Contractor to furnish certified copies of the original policies of all insurance required hereunder at any time upon fifteen (15) days prior written notice. The insurance requirements set forth herein are not intended and shall not be construed to modify, limit, or reduce the indemnifications made in this Contract by the Contractor to the City of to limit the Contractor's liability under this Contract to the limits of the policies of insurance required to be maintained by the Contractor hereunder.

(a) WORKERS COMPENSATION AND EMPLOYERS LIABILITY

(1) Workers' Compensation – Statutory limits

(2) Employers Liability - $100,000 Each Accident – Bodily Injury by Accident; $100,000 Each Employee – Bodily Injury by Disease; $500,000 Policy Limit – Bodily Injury by Disease

(3) Other states insurance including Pennsylvania

(b) GENERAL LIABILITY INSURANCE

(1) Limit of Liability: $1,000,000 per occurrence combined single limit for bodily injury (including death) and property damage liability.

(2) Coverage: Premises operation: Blanket Contractual liability; Personal Injury liability; Products and completed operations; Independent Contractors; Employees as additional insured; Cross liability; Broad form property damage (including loss of use) liability; Asbestos abatement liability coverage (Note: Required for asbestos abatement projects only).

(c) AUTOMOBILE LIABILITY

(1) Limit of Liability: $1,000,000 per occurrence combined single limit for bodily injury (including death) and property damage liability.

(2) Coverage: owned, non-owned and hired vehicles.

16. **INDEMNIFICATION**. All bidders shall indemnify, defend and hold harmless the City, its officers, employees and agents from and against any and all losses, costs (including, but not limited to, litigation and settlement costs and counsel fees), claims, suits, actions, damages, liabilities and expenses, occasioned wholly or in part by the bidder's act or omission or fault or negligence or the act or omission or fault or negligence of bidder's agents, subcontractors (including suppliers), employees or servants in connection with the Contract, including, but not limited to, those acts or omissions or faults or negligence in connection with loss of life, bodily injury, personal injury, damage to property, contamination or adverse effects on the environment, the bidder's default under the Contract, losses incurred by the City's Master Performance Security Program, failure to pay subcontractors and suppliers and any infringement or violation of any proprietary right (including, but not limited to, patent, copyright, trademark, service mark and trade secret). This obligation to indemnify, defend and hold harmless the City, its officers, employees and agents shall survive the termination of the Contract resulting from the Invitation and Bid.

17. FAILURE TO EXECUTE CONTRACT. Any bidder not lawfully released from its bid, who refuses to execute a contract in accordance with its bid or who fails, refuses or is unable to furnish any required payment security, performance security or insurance, as may be required by the Invitation and Bid and/or these Terms and Conditions of Bidding and Contract, shall be liable for the entire amount of its bid security, as liquidated damages to the City; or if bid security is furnished under the Annual Master Bid Security

Program, for 10% of the amount of its bid, as liquidated damages to the City; or where the damages are readily ascertainable by the City, for the actual loss, cost or damage incurred by the City as a result of its failure to execute the contract or to furnish such bonds, performance security or insurance.

18. **ASSIGNMENT**. The successful bidder shall not assign the Contract resulting from the Invitation and Bid, or any part of the Contract, or any right to any monies to be paid under the Contract, or delegate performance of the Contract, without obtaining the prior written consent of the Procurement Commissioner. The decision whether to consent to an assignment is within the Procurement Commissioner's sole discretion. In no case shall the Procurement Commissioner's consent to the assignment of any monies to be paid under the Contract relieve the bidder from faithful performance of any of its obligations under the Contract or change any of the terms and conditions of the Contract. Any purported assignment in violation of this provision shall be of no effect.

19. DEFAULT. All work performed and goods and services rendered by a successful bidder (referred to in this Section as "Contractor") under any Contract resulting from the Invitation and Bid shall strictly conform to these Terms and Conditions of Bidding and Contract and the specifications and requirements contained in the Invitation and Bid. The successful bidder shall comply with all applicable federal, state and local laws, statutes and ordinances and the regulations of all governmental departments, boards, agencies, and commissions. The following shall constitute events of default under any Contract resulting from the Invitation and Bid:

a. Failure by Contractor to comply with any provision or Section of the Contract, including the bid specifications contained in the Invitation and Bid and these Terms and Conditions of Bidding and Contract and/or failure by Contractor to comply with any federal, state and local law, statute, ordinance or regulation of any governmental department, board, agency and commission.

b. Falseness of any representation or warranty made in the Contract or other document(s) submitted to the City by Contractor in connection with the Invitation and Bid.

c. Failure by Contractor to pay its suppliers or subContractors, misappropriation of any funds provided under the Contract or failure to notify City upon discovery of any misappropriation.

d. A violation of law by Contractor which results in its making a guilty plea, a plea of nolo contendere, or conviction of a criminal offense by Contractor, its directors, employees, or agent or indictment or charges, in the sole judgment of the Procurement Commissioner, adversely affect the performance of the Contract.

e. Failure by Contractor to comply with the Mayoral Executive Order establishing the City's antidiscrimination policy relating to the participation of minority, woman and disabled owned disadvantaged business enterprises.

f. The Procurement Department's determination that the Contractor is not a responsible bidder on the Invitation and Bid, where such determination is made, and is based upon, information received after award of the Contract and/or after execution of the Contract by the Procurement Commissioner and/or after satisfaction of any or all other conditions of a binding Contract set forth in Section 2 above.

g. Any other act or omission identified in these Terms and Conditions of Bidding and Contract or elsewhere in the Invitation and Bid as an event or condition constituting default.

Upon the occurrence of an event of default, the Procurement Commissioner, in his/her sole discretion, may require Contractor to cure the default within a period of time to be determined by the Procurement Commissioner, or terminate the Contract in whole or in part and exercise any one or more of the following remedies (which remedies may be concurrent and shall be in addition to and not in lieu of the remedies available to the City at law, in equity, under any bond(s) filed in connection with the contract or under other sections of these Terms and Conditions of Bidding and Contract and Contract):

a. Purchase goods and/or services from others in substitution of goods or services that were not furnished or performed by Contractor or that were defective or otherwise in violation of any provision of the Contract; the cost of such substituted goods and services shall be the sole responsibility of Contractor and Contractor agrees to pay immediately, upon receipt of the City's invoice, the difference between the Contract price and the substituted product or service cost, plus any other loss, cost or damages incurred by the City.

b. Appropriate to the payment of the difference between the Contract price and the cost of such substitute goods or services, and the amount of any other loss, cost or damage incurred by the City as a result of the default, any monies which may then be due and payable to Contractor under this Contract or any other Contract that Contractor then has with the City.

The City shall notify Contractor in writing of such termination, which shall be effective as of the date specified in the notice of termination (the "Termination Date"). The Procurement Commissioner may, in his/her sole discretion, require Contractor to continue to furnish all goods and perform all services required under the Contract until the Termination Date, in which case, subject to the remedies enumerated above, the successful bidder shall be paid in accordance with the Contract therefore. If the City requires Contractor to cure the event(s) of default, or to continue to furnish goods or services until the Termination Date, and Contractor refuses or fails to do so, then such failure shall itself be deemed an event of default under this Section, for which the City may exercise any of its rights hereunder.

20. PAYMENT FOR EQUIPMENT. Unless otherwise provided in the bid specifications, when equipment involves installation, (which shall also be interpreted to mean erection and/or setting up or placing in position for service or use) and/or testing, and where such installation or testing is delayed though no fault of the contractor, contractor shall be entitled to a payment equal to 50% of the price bid when such equipment is delivered on site and to a further payment equal to an additional 25% of the price bid when the equipment is

installed and ready for test. The balance shall be paid only after the equipment is tested and found to be satisfactory by the City. If the equipment must be tested, but installation is not required to be made by the supplier or if the equipment must be installed but testing is not required, and the installation or testing is delayed through no fault of the contractor, contractor shall be entitled to a payment equal to 75% of the price bid at the time of delivery and the balance shall be paid after satisfactory testing and/or installation, as required.

TAX MATTERS

21. **TAX EXEMPTION**. The City of Philadelphia is exempt from the payment of any federal excise or transportation taxes and any Pennsylvania sales tax. The price bid must be net, exclusive of taxes. However, when under established trade practice any federal excise tax is included in list prices, bidder may quote the list price and shall show separately the amount of the federal tax, either as a flat sum or as a percentage of the list price, which shall be deducted by the City. In the event bidder pays any sales or use tax, bidder hereby assigns to City, or City's agent, all of its rights, title and interest in any sales or use tax which may be refunded as a result of the purchase of any articles furnished in connection with the Contract and bidder, unless directed by the City, shall not file a claim for any sales or use tax refund subject to this assignment. Bidder authorizes the City, in City's name or the name of bidder, to file a claim for refund of any sales or use tax subject to this assignment.

22. TAX INDEBTEDNESS. The City of Philadelphia does not wish to do business with tax delinquents or other businesses indebted to the City. In furtherance of this policy, the following certifications have been developed and shall form a part of any Contract resulting from the Invitation and Bid. The successful bidder or other entity Contracting with the City is referred to below as the "Contractor".

a. Contractor's Certification of Non-Indebtedness - Contractor hereby certifies and represents that Contractor and Contractor's parent company(ies) and subsidiary(ies) are not currently indebted to the City of Philadelphia (the "City") and will not at any time during the term of this Contract (including any extensions or renewals thereof) be indebted to the City, for or on account of any delinquent taxes (including, but not limited to, taxes collected by the City on behalf of the School District), liens, judgments, fees or other debts for which no written agreement or payment plan satisfactory to the City has been established. In addition to any other rights or remedies available to the City at law or in equity, Contractor acknowledges that any breach or failure to conform to this certification may, at the option of the City, result in the withholding of payments otherwise due to Contractor and, if such breach or failure is not resolved to the City's satisfaction within a reasonable time frame specified by the City in writing, may result in the offset of any such indebtedness against said payments and/or the termination of this Contract for default (in which case Contractor shall be liable for all costs, losses and other damages resulting from the termination).

b. Subcontractor's Certification of Non-Indebtedness - Contractor shall require all subcontractors performing work in connection with this Contract ("subcontractor" shall also include suppliers providing goods or materials) to be bound by the following provision, and Contractor shall cooperate fully with the City in exercising the rights and remedies described below or otherwise available at law or in equity:

"Subcontractor hereby certifies and represents that subcontractor and subcontractor's parent company(ies) and subsidiary(ies) are not currently indebted to the City of Philadelphia ("City"). and will not at any time during the term of Contractor's Contract with the City (the "Contract"), including any extensions or renewals thereof, be indebted to the City, for or on account of any delinquent taxes (including, but not limited to, taxes collected by the City on behalf of the School District of Philadelphia), liens, judgments, fees or other debts for which no written agreement or payment plan satisfactory to the City has been established. In addition to any other rights or remedies available at law or in equity, subcontractor acknowledges that any breach of or failure to conform to this certification may, at the option of the City, result in the withholding of payments otherwise due to subcontractor for services rendered in connection with the Contract and, if such breach or failure is not resolved to the City's satisfaction within a reasonable time frame specified by the City in writing, may result in the offset of any such indebtedness against said payments otherwise due to subcontractor and/or the termination of subcontractor for default (in which case subcontractor shall be liable for all costs, losses and other damages resulting from the termination)."

23. TAX REQUIREMENTS. Any person or entity who bids on and/or is awarded a contract by the City and/or School District of Philadelphia, is subject to Philadelphia's business tax ordinances and regulations. The City Solicitor has determined that anyone who is awarded a contract by the City and/or School District pursuant to a bid has entered into a contract within the City, and the subsequent delivery of goods into the City or performance of services within the City constitutes doing business in the City and subjects the successful bidder, including but not limited to, one or more of the following taxes:

a. Business Privilege Tax
b. Net Profits Tax
c. City Wage Tax

The successful bidder, if not already paying the aforesaid taxes, is required to apply to the Department of Revenue, 1401 John F. Kennedy Blvd., Public Service Concourse, Municipal Services Building, Philadelphia, PA 19102 for a tax identification number and to file appropriate business tax returns as provided by law. Questions should be directed to the Business and Earnings Tax Unit at (215) 686-6600.

GENERAL INFORMATION

24. COMPLIANCE WITH LAWS. All goods and services and all documents and other materials furnished under the Contract shall conform with all applicable federal, state and local laws, statutes and ordinances and the applicable rules, regulations, methods and procedures of all governmental boards, bureaus, offices, commissions and other agencies. Contractor shall maintain during the term of the Contract all licenses, and authorizations required by

any applicable federal, state or local law or regulation. Applicable law shall include, without limitation, the laws stated in paragraphs 25 through 29 herein.

25. NONDISCRIMINATION.

a. Any Contract awarded pursuant to the Invitation and Bid is entered into under the terms of the Philadelphia Home Rule Charter and in its performance, Contractor shall not discriminate nor permit discrimination against any person because of race, color, religion, national origin, or sex. Such discrimination shall constitute an event of default under this Contract entitling City to terminate this Contract forthwith. This right of termination shall be in addition to any other rights or remedies as provided herein in Section 19 or otherwise available to the City at law or in equity.

b. In accordance with Chapter 17-400 of The Philadelphia Code, Contractor agrees that its payment or reimbursement of membership fees or other expenses associated with participation by its employees in an exclusionary private organization, insofar as such participation confers an employment advantage or constitutes or results in discrimination with regard to hiring, tenure of employment. promotions, terms, privileges or conditions of employment, on the basis of race, color, sex, sexual orientation, gender identity, religion, national origin or ancestry, shall constitute an event of default under this Contract and shall entitle the City to all rights and remedies as provided herein in Section 19 or otherwise available to the City at law or in equity. Contractor agrees to include the immediately preceding sentence, with appropriate adjustments for the identity of the parties, in all subcontracts which are entered into pursuant to this Contract. Contractor further agrees to cooperate with the Commission on Human Relations of the City of Philadelphia in any manner which the said Commission deems reasonable and necessary for the Commission to carry out its responsibilities under Chapter 17-400 of The Philadelphia Code. Failure to so cooperate shall constitute an event of default under this Contract entitling the City to all rights and remedies as provided herein in Section 19 or otherwise available to the City at law or in equity.

26. ETHICS REQUIREMENTS. To preserve the integrity of City employees and maintain public confidence in the competitive bidding system, the City intends to vigorously enforce the various ethics laws as they relate to City employees in the bidding and execution of City contracts. Such laws are in three categories:

a. Gifts. Executive Order No. 02-04 prohibits City employees from soliciting or accepting anything of value from any person or entity seeking to initiate or maintain a business relationship with the City of Philadelphia, its departments, boards, commissions, and agencies. Bidder understands and agrees that if it offers anything of value to a City official or employee under circumstances where the receipt of such item would violate the provisions of this Executive Order shall be subject to sanctions with respect to future City Contracts. Such sanctions may range from disqualification from participation in a particular Contract to debarment, depending on the nature of the violation. All bidders, agents or intermediaries who are solicited for gifts or gratuities by City employees are urged to report these incidents to the Inspector General, Aramark Tower, Third Floor, 1101 Market Street, Philadelphia, PA 19107.

b. City Employee Interest in City Contracts. In accordance with Section 10-1112 of The Philadelphia Home Rule Charter, no bid shall be accepted from, or Contract awarded to, any City employee or official, or any firm in which a City employee or official has a direct or indirect financial interest. All bidders are required to disclose any current City employees or officials who are employees or officials of the bidder's firm, or who otherwise would have a financial interest in the Contract.

c. Conflict of Interest. Both the State Ethics Act and the City Ethics Code prohibit a public employee from using his/her public office or any confidential information gained thereby to obtain financial gain for himself/herself a member of his/her immediate family, or a business with which he/she or a member of his/her immediate family is associated. "Use of public office" is avoided by the employee or official publicly disclosing the conflict and disqualifying himself/herself from official action in the matter, as provided in The Philadelphia Code Section 20-608.

27. NORTHERN IRELAND. Section 17-104(2)(b) of The Philadelphia Code prohibits the City from accepting bids from companies that do business in Northern Ireland, unless that business has implemented the fair employment principles embodied in the MacBride Principles. In furtherance of this ordinance, bidder makes the following certification and representations:

a. In accordance with Section 17-104 of the Philadelphia Code, bidder by execution of its bid certifies and represents that (i) bidder (including any parent company, subsidiary, exclusive distributor, or company affiliated with Bidder) does not have, and will not have at any time during the term of any Contract resulting from this bid (including any extensions thereof), any investments, licenses, franchises, management agreements or operations in Northern Ireland, and (ii) no product to be provided to the City under any resulting Contract will originate in Northern Ireland. unless Bidder has implemented the fair employment principles embodied in the MacBride Principles.

b. In the performance of any Contract resulting from this bid, Bidder agrees that it will not utilize any suppliers or subcontractors at any tier (i) who have (or whose parent subsidiary, exclusive distributor of company affiliate have) any investments, licenses, franchises, management agreements or operations in Northern Ireland or (ii) who will provide products originating in Northern Ireland unless said supplier or subcontractor has implemented the fair employment principles embodied in the MacBride Principles. Bidder further agrees to include provisions with this subparagraph (b), with appropriate adjustments for the identity of the parties, in all subcontracts and supply agreements which are entered into in connection with the performance of any resulting Contract.

c. Bidder agrees to cooperate with the City's Director of Finance in any manner which the said Director deems reasonable and necessary to carry out the Director's responsibilities under Section 17-104 of The Philadelphia Code. Bidder expressly understands and agrees that any false certification or representation in

connection with this subparagraph (c) and/or any failure to comply with the provisions of this subparagraph (c) shall constitute a substantial breach of any Contract resulting from the Invitation and Bid entitling the City to all rights and remedies provided in this bid or otherwise available in law (including, but not limited to, Section 17-104 of the Philadelphia Code) or at equity. In addition, it is understood that false certification or representation is subject to prosecution under IS Pa.C.S. Section 4904.

28. BUSINESS, CORPORATE AND SLAVERY ERA INSURANCE DISCLOSURE. In accordance with Section 17-104 of The Philadelphia Code, the successful bidder, after award of the Contract, will complete an affidavit certifying and representing that the bidder (including any parent company, subsidiary, exclusive distributor or company affiliated with bidder) has searched any and all records of the bidder or any predecessor business entity regarding records of investments or profits from slavery or slaveholder insurance policies during the slavery era. The names of any slaves or slaveholders described in those records must be disclosed in the affidavit.

The bidder expressly understands and agrees that any false certification or representation in connection with this Paragraph and/or any failure to comply with the provisions of this Paragraph shall constitute a substantial breach of this Contract entitling the City to all rights and remedies provided in this Contract or otherwise available in law (including, but not limited to, Section 17-104 of The Philadelphia Code) or equity and the Contract will be deemed voidable. In addition, it is understood that false certification or representation is subject to prosecution under Title 18 Pa.C.S.A. Section 4904.

29. PHILADELPHIA 21st CENTURY MINIMUM WAGE STANDARD. If Contractor is an Employer, as defined at Philadelphia Code Section 17-1303, Contractor shall comply with the minimum compensation standards by providing its employees with an hourly wage, excluding benefits, at least 150 percent of the federal or state minimum wage, whichever is higher, as more fully set forth at Philadelphia Code Chapter 17-1300. The Contractor shall promptly provide to the City all documents and information verifying its compliance with the requirements of Section 17-1300. Furthermore, Contractor shall notify each affected employee what wages are required to be paid.

The Office of Labor Standards may grant a partial or total waiver of Section 17-1300 based on specific stipulated reasons elaborated in Section 17-1304 of the Philadelphia Code.

TERMS AND CONDITIONS OF BIDDING AND CONTRACT

SIGNING OF BIDS

This contract consists of the Invitation and Bid (including exhibits and attachments), any addenda thereto issued by the City and the foregoing Terms and Conditions of Bidding and Contract (collectively, the "contract") and contains all the terms, conditions and requirements agreed upon by the parties. The terms "contract" and "agreement," whether capitalized or uncapitalized, shall have the foregoing meaning wherever they are used in the invitation and Bid, addenda thereto, the Terms and Conditions of Bidding and Contract, and this page. No other contract or agreement, oral or otherwise, regarding the subject matter of the contract shall be deemed to exist or to bind any party hereto or to vary any of the terms contained in the contract.

This contract may not be changed, amended or renewed, in whole or in part, except by a written amendment signed by the parties. No waiver by the City of any breach or noncompliance by the undersigned with any provision of this contract shall relieve the undersigned of any of its obligations or representations made under this contract.

This contract and all disputes arising under this contract shall be governed, construed and decided in accordance with the laws of the Commonwealth of Pennsylvania. The parties agree that any lawsuit, action, claim or legal proceeding involving, directly or indirectly, any matter arising out of or related to this contract or the relationship created or evidenced thereby, shall be brought exclusively in the United States District Court for the Eastern District of Pennsylvania or the Court of Common Pleas of Philadelphia County. It is the express intent of the parties that jurisdiction over any lawsuit, action, claim, or legal proceeding shall lie exclusively in either of these two forums. The parties further agree not to raise any objection to any lawsuit, action, claim or legal proceeding which is brought in either of these two forums and the parties expressly consent to the jurisdiction and venue of these two forums. The parties further agree that service of original process in any such lawsuit, action, claim or legal proceeding may be duly affected by mailing a copy thereof, by certified mail, postage prepaid to the addresses specified in the Invitation and Bid and/or this page.

NOTE: ANY BID THAT IS NOT EXECUTED IN ACCORDANCE WITH THE INSTRUCTIONS PROVIDED BELOW OR THAT DOES NOT INCLUDE STREET ADDRESS, CITY, STATE AND PHONE NUMBER, MAY, IN THE SOLE DISCRETION OF THE PROCUREMENT COMMISSIONER, BE REJECTED.

SIGNING OF BIDS:
If bid is by an INDIVIDUAL or a PARTNERSHIP, or if the bid does not exceed $30,000, date and sign the bid here, with the original signatures, in ink.

This _____day of_____20

(Signature of Owner, Partner)	**(Type or Print Name and Title)**
(Business Name of Bidder)	
(Address, including Zip Code)	**(Telephone Number, including Area Code)**

If the bid is a CORPORATION, date and sign the bid here with original signatures, in ink, by (a) President or Vice President of the Corporation AND (b) Secretary, Assistant Secretary, Treasurer or Assistant Treasurer of the Corporation; and (c) affix the seal of the Corporation. If the form is not signed by the President or a Vice President and Secretary, Assistant Secretary, Treasurer or Assistant Treasurer, attach a duly certified corporate resolution authorizing the person signing in place of such officers to execute this bid for the corporation.

This_____day of_____20

CORPORATE SEAL

	(Corporate or Business Name of Bidder)
(Address, including Zip Code)	**(Telephone Number, including Area Code)**
(Signature of President or Vice President)	**(Signature of Secy., Asst. Secy., Treas. or Asst. Treas.)**
(Type or Print Name and Title)	**(Type or Print Name and Title)**

APPROVED AS TO FORM	**CONTRACT EXECUTION**
(Assistant City Solicitor)	**(Procurement Commissioner)**

C I T Y O F P H I L A D E L P H I A

PROCUREMENT DEPARTMENT
120 Municipal Services Building
Philadelphia, Pa 19102-1685

Hugh Ortman
Procurement Commissioner

Dear Valued Vendor,

The City of Philadelphia is pleased to announce a new online **Vendor Invoice Information (VII) Website** which will allow businesses such as yours to inquire about the status of invoices billed against purchase orders and professional services contracts. The only requirement is that your invoices utilize a unique number – alpha, numeric or a combination of the two.

This system will be operational twenty four hours a day, seven days a week. All you have to do is log on to the City of Philadelphia website: **www.phila.gov,** click on "Vendor Invoice Information" under the "Help Me" section of the home page, enter your Federal Employer Identification Number (FEIN) and a valid active purchase order. Then, agree to a waiver statement and follow the prompts to get an up-to-date status on your payments.

You are urged to give it a try and see for yourself how easy it is to use. If you should happen to experience any problems, or if you would like to comment on this new system, please e-mail us using the question and comment field provided on the site.

We believe that you will find this new way of obtaining payment information convenient and easy to use.